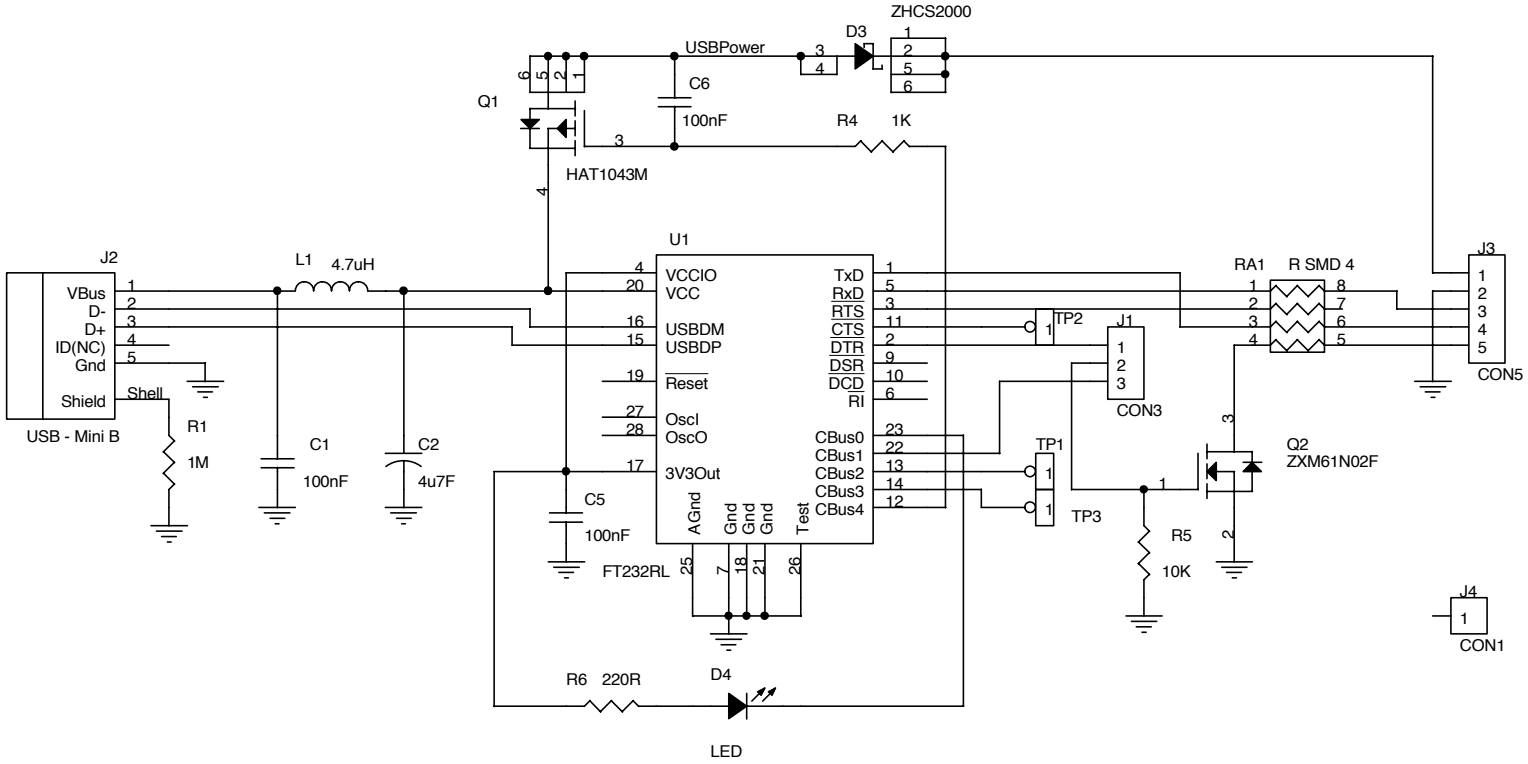

Title	SLUG-INF	
Size A4	Document Number <Doc>	Rev 0
Date: Thursday, June 29, 2006	Sheet 1 of 1	