UNSW

Caches:
What Every OS Designer Must Know

COMP9242
2009/S2 Week 5

Copyright Notice

UNSW

These slides are distributed under the Creative Commons Attribution 3.0 License

- You are free:
  - **to share** — to copy, distribute and transmit the work
  - **to remix** — to adapt the work
- Under the following conditions:
  - **Attribution.** You must attribute the work (but not in any way that suggests that the author endorses you or your use of the work) as follows:
    - "Courtesy of Gernot Heiser,UNSW"
- The complete license text can be found at http://creativecommons.org/licenses/by/3.0/legalcode

The Memory Wall

UNSW

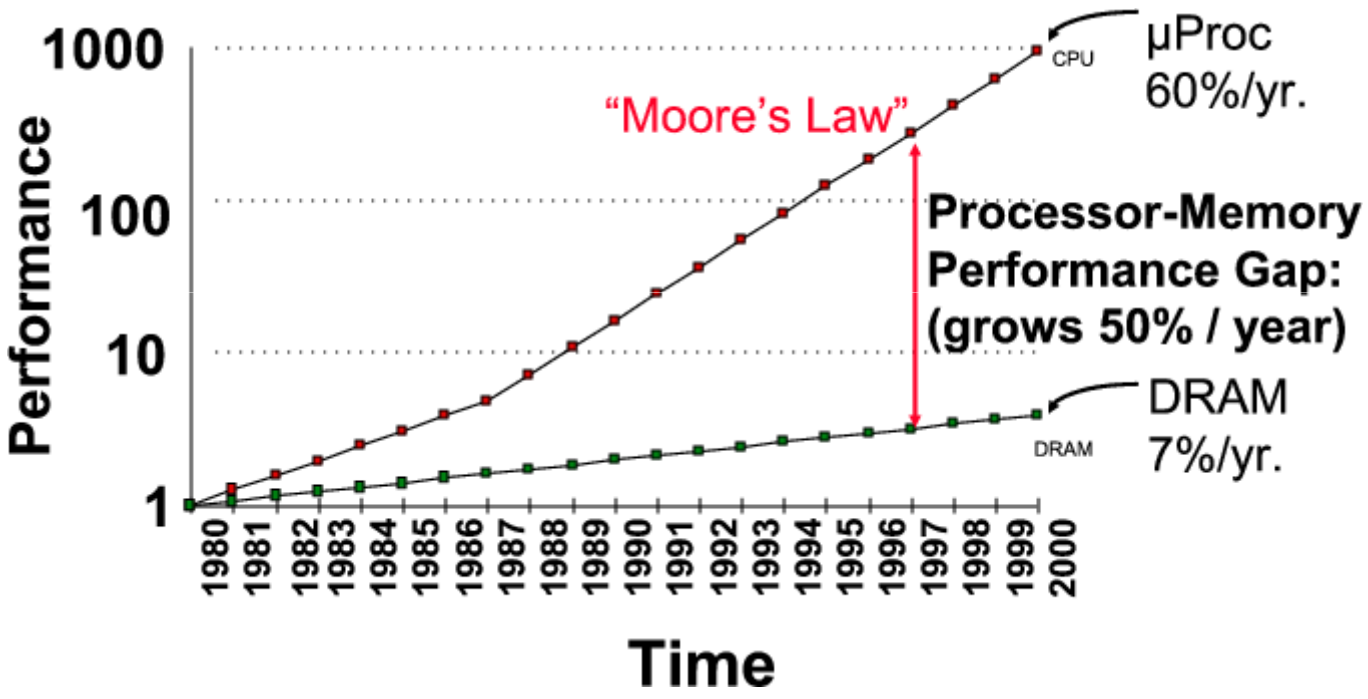

Caching

UNSW

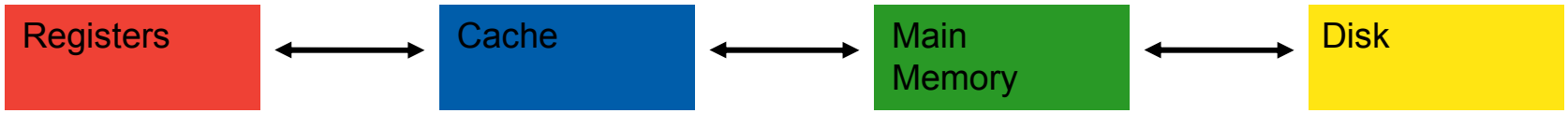

- Cache is fast (1–5 cycle access time) memory sitting between fast registers and slow RAM (10–100 cycles access time)
- Holds recently-used data or instructions to save memory accesses
- Matches slow RAM access time to CPU speed if high **hit rate** *(90%)*
- Is hardware maintained and (mostly) transparent to software
- Sizes range from few KiB to several MiB.
- Usually a hierarchy of caches (2–5 levels), on- and off-chip

Good overview of implications of caches for operating systems: [Schimmel 94]

Cache Organization

UNSW

- Data transfer unit between registers and L1 cache: ≤ 1 word (1–16B)
- Cache *line* is transfer unit between cache and RAM (or slower cache)
  - typically 16–32 bytes, sometimes 128 bytes and more
- Line is also unit of storage allocation in cache
- Each line has associated control info:
  - valid bit
  - modified bit
  - tag
- Cache improves memory access by:
  - absorbing most reads (increases bandwidth, reduces latency)
  - making writes asynchronous (hides latency)
  - clustering reads and writes (hides latency)

Cache Access

UNSW

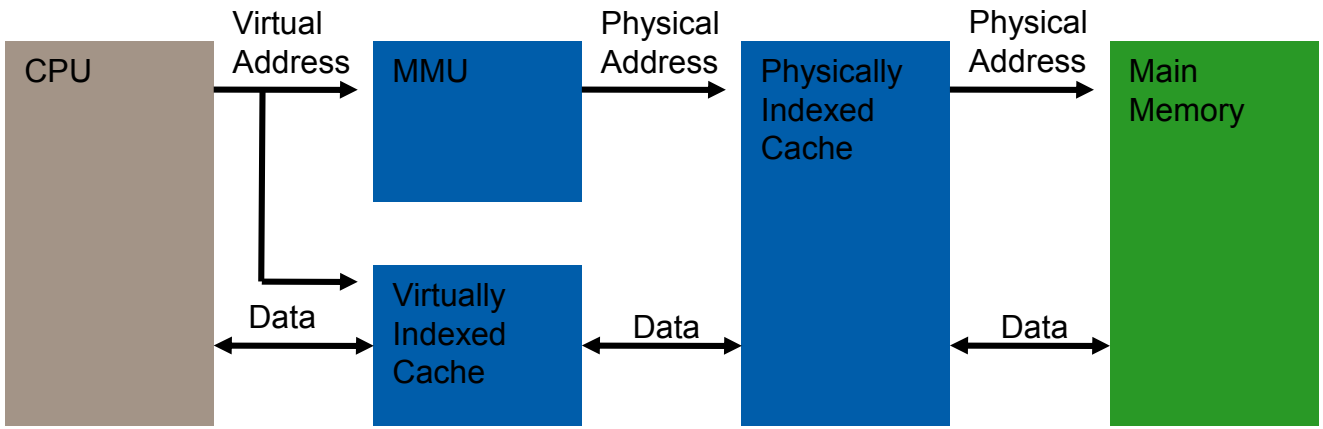

- **Virtually indexed:** looked up by *virtual address*
  - operates concurrently with address translation
- **Physically indexed:** looked up by *physical address*
  - requires result of address translation

Cache Indexing

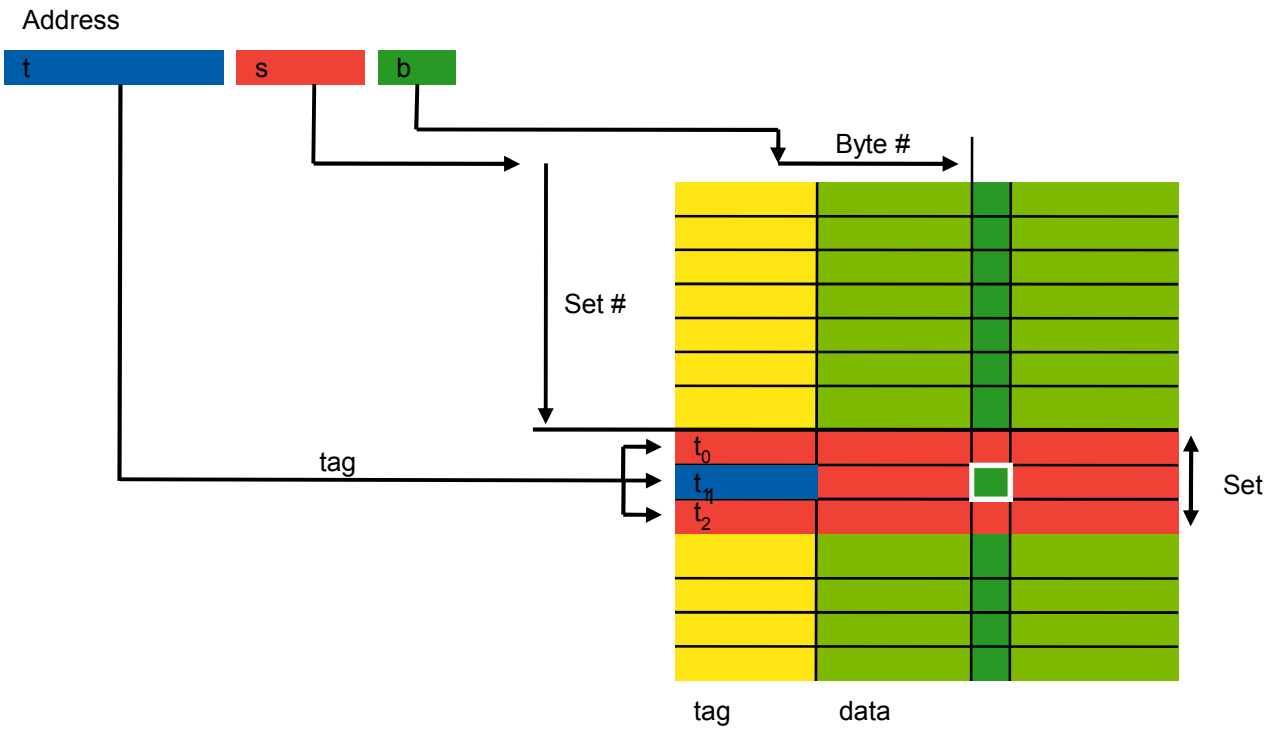

- The *tag* is used to distinguish lines of set...
- … consists of the address bits not used for indexing.

Cache Indexing

UNSW

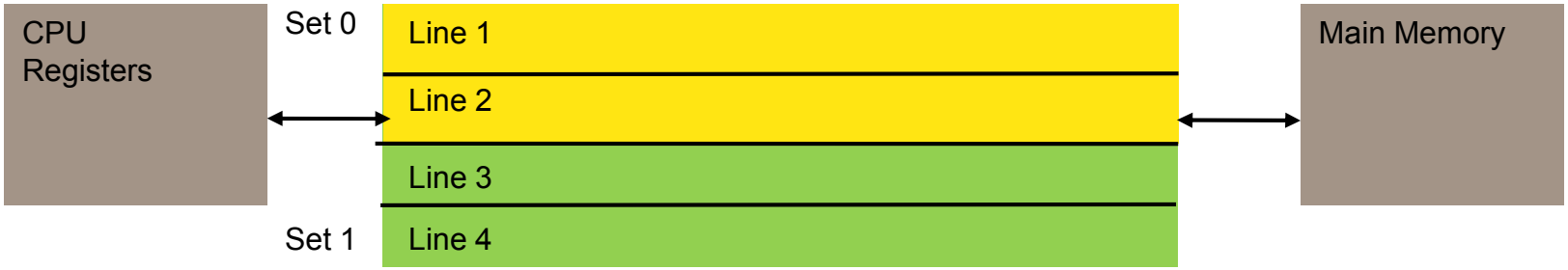

- Address is hashed to produce index of *line set.*
- Associative lookup of line within set
- *n* lines per set: *n-way set-associative cache.*
  - typically n = 1 . . . 5, some embedded processors use 32–64
  - n = 1 is called *direct mapped.*
  - n = *No. lines* is called *fully associative* (unusual for CPU caches)
- Hashing must be simple (complex hardware is slow)
  - use least-significant bits of address

Cache Indexing: Direct Mapped

UNSW

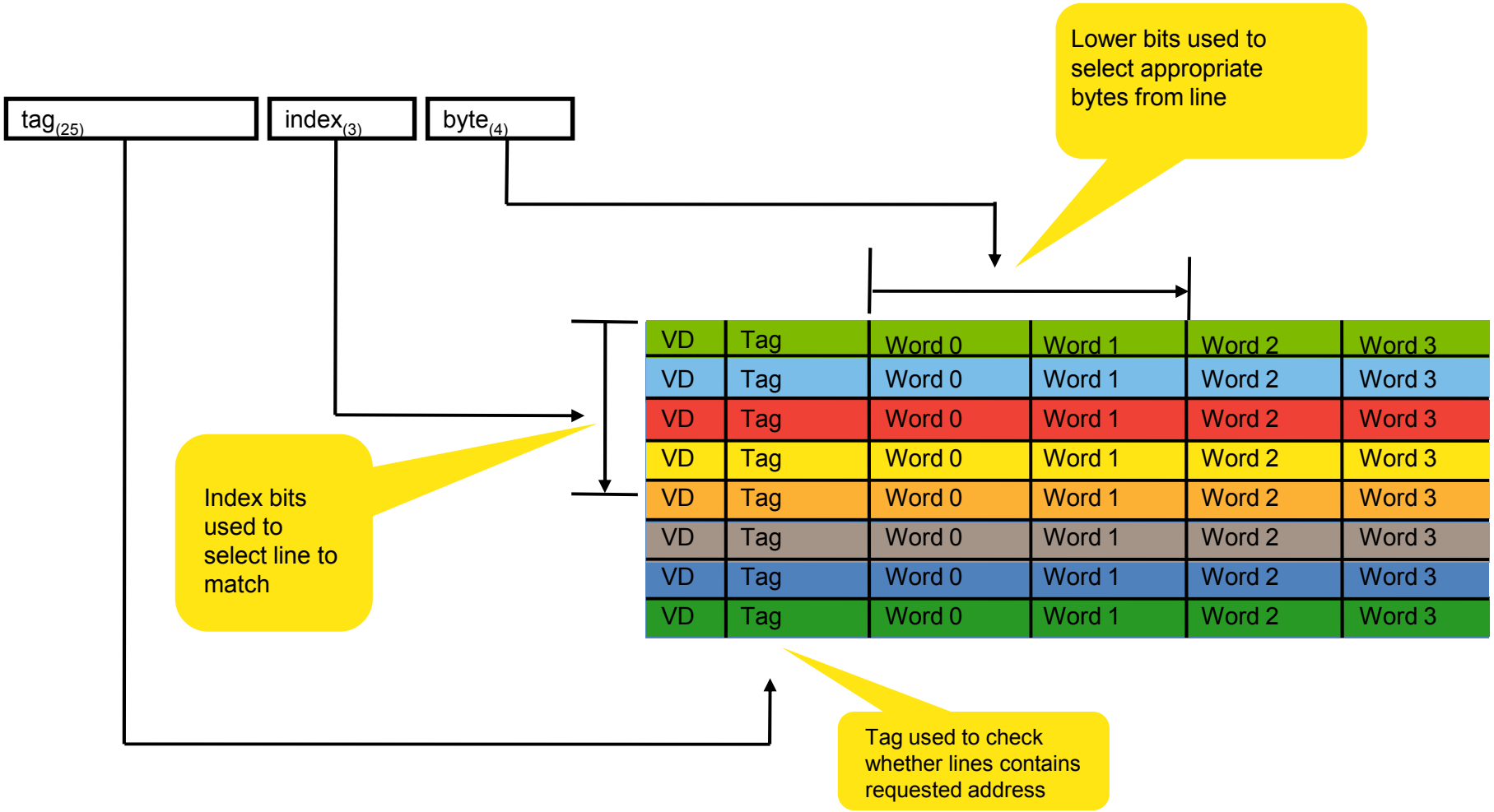

Cache Indexing: 2-Way Associative

UNSW

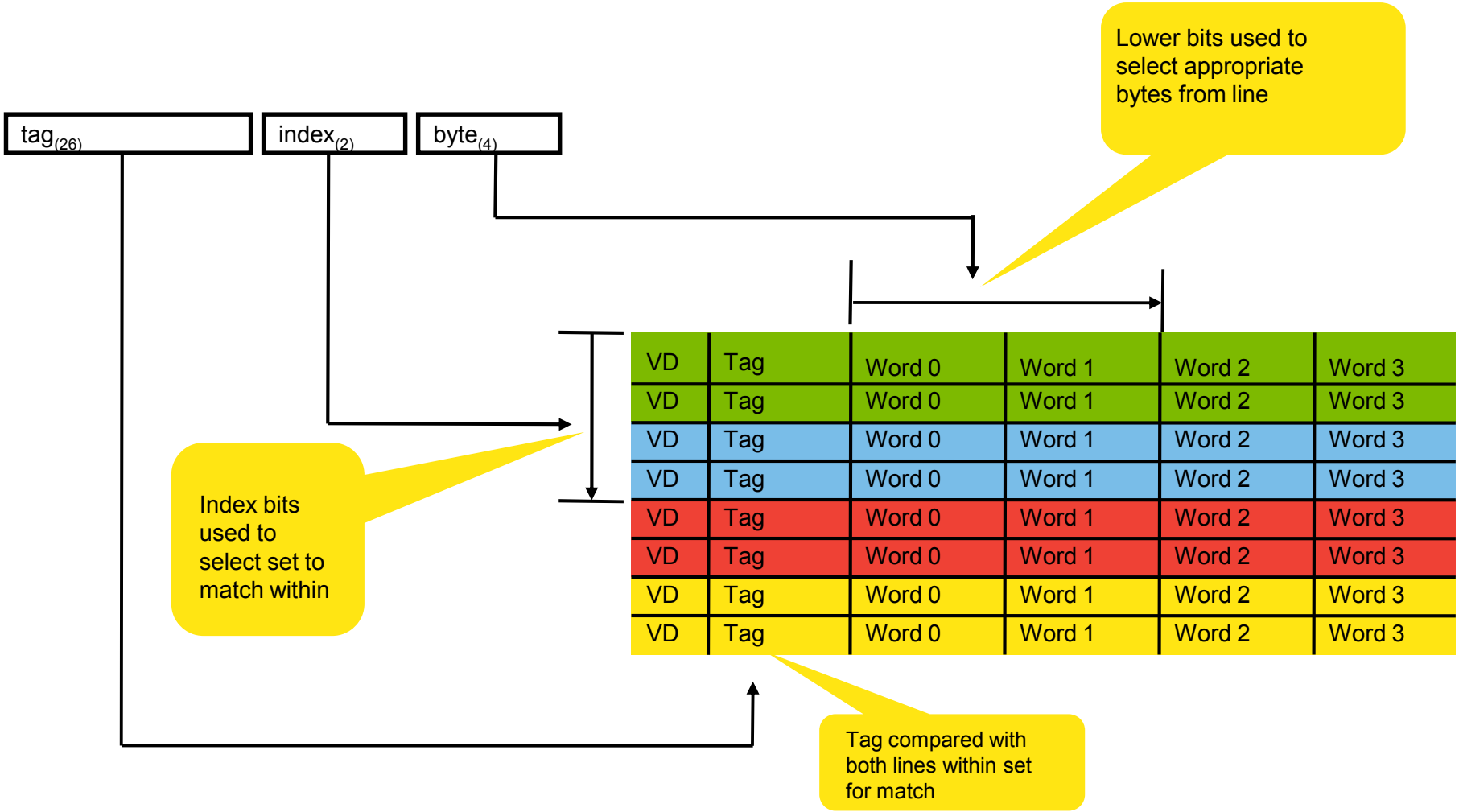

Caching Index: Fully Associative

UNSW

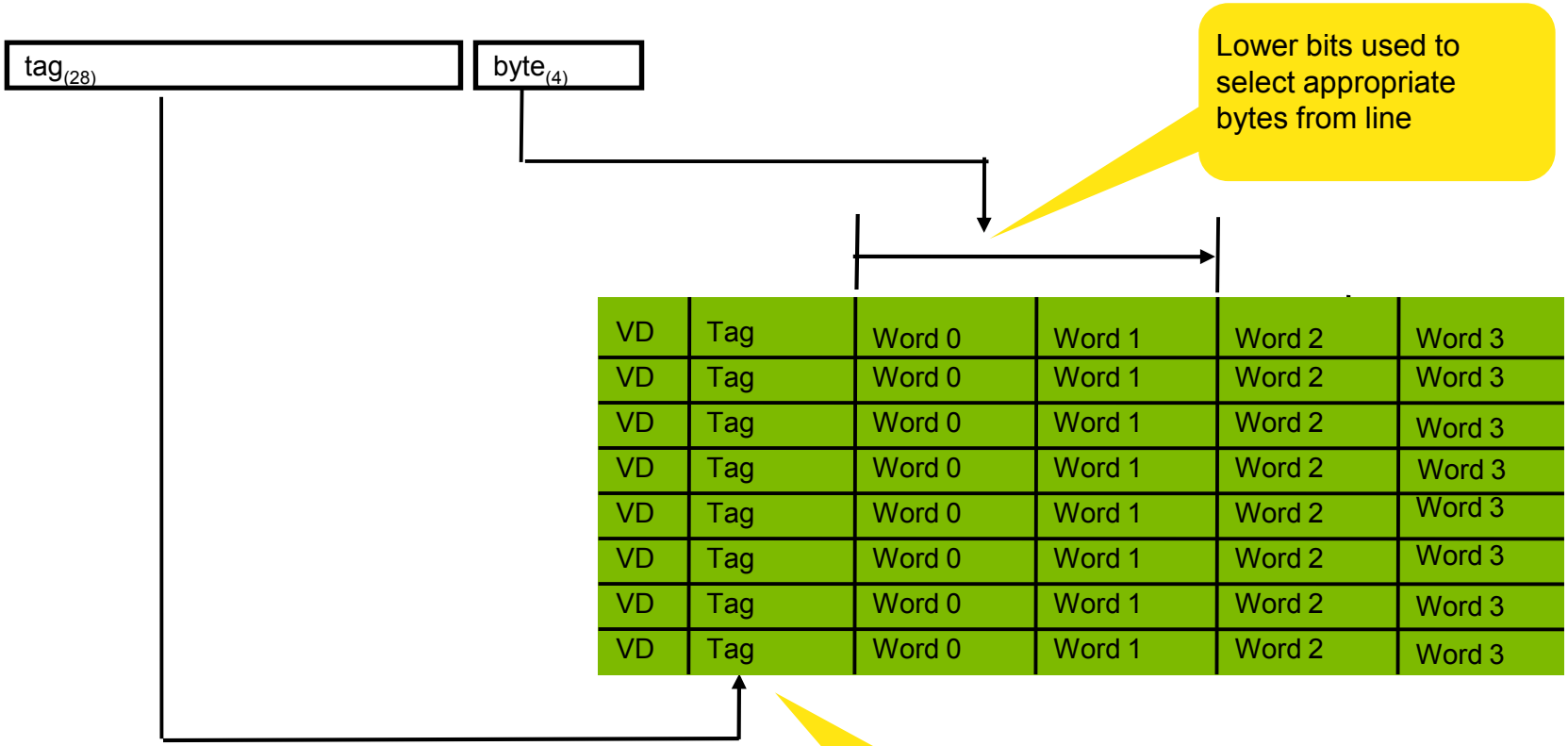

Note: Lookup hardware for many tags is large and slow ⇒does not scale

Cache Mapping

UNSW

- Different memory locations map to same cache line:

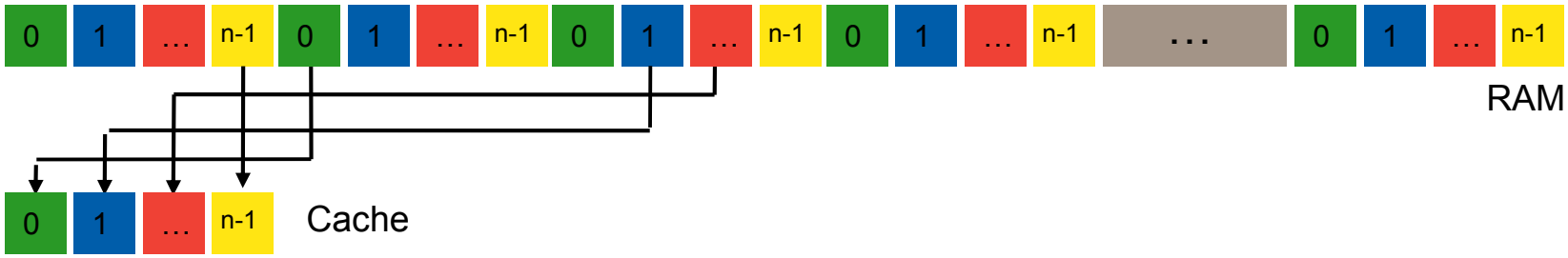

- Locations mapping to cache set # i are said to be of *colour i*
- *n-way* associative cache can hold *n* lines of the same colour
- Types of cache misses:
  - **Compulsory miss:** data cannot be in cache (of infinite size)
    - first access (after flush)
  - **Capacity miss:** all cache entries are in use by other data
  - **Conflict miss:** set of the right colour is full
    - miss that would not happen on fully-associative cache
  - **Coherence miss:** miss forced by hardware coherence protocol
    - multiprocessors

Cache Replacement Policy

UNSW

- Indexing (using address) points to specific line set.
- On miss: all lines of set valid ⇒ must *replace existing line.*
- Replacement strategy must be simple (hardware)
  - Dirty bit determines whether line needs to be written back
  - Typical policies:
    - pseudo-LRU
    - FIFO
    - random
    - toss clean

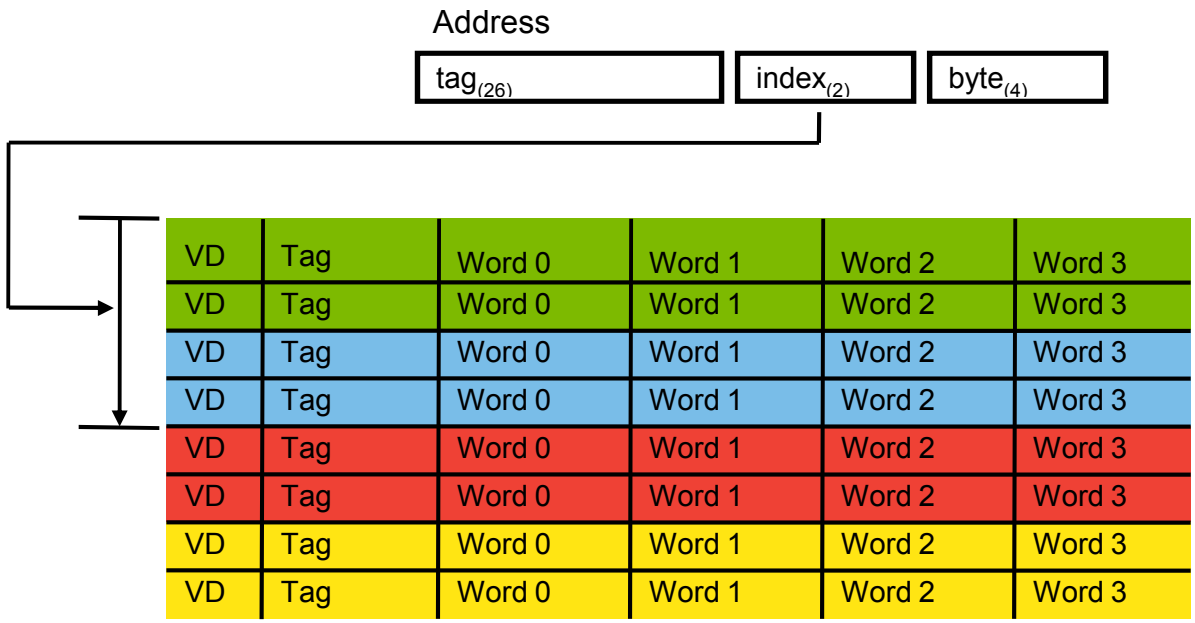

Cache Write Policy

UNSW

- Treatment of store operations:
  - **write back:** Stores update cache only

memory is updated once dirty line is replaced (flushed)

    - ✓ clusters writes
    - ✗ memory is inconsistent with cache
    - ✗ unsuitable for (most) multiprocessor designs
  - **write through:** Stores update cache and memory immediately
    - ✓ memory is always consistent with cache
    - ✗ increased memory/bus traffic
- On store to a line not presently in cache, use:
  - **write allocate:** allocate a cache line to the data and store
    - typically requires reading line into cache first!
  - **no allocate:** store to memory and bypass cache
- Typical combinations:
  - write-back & write-allocate
  - write-through & no-allocate

Cache Addressing Schemes

UNSW

- For simplicity, discussion so far assumed cache sees only one kind of address: virtual or physical
- However, *indexing and tagging can use different addresses*
- Four possible addressing schemes:
  - virtually-indexed, virtually-tagged (VV) cache
  - virtually-indexed, physically-tagged (VP) cache
  - physically-indexed, virtually-tagged (PV) cache
  - physically-indexed, physically-tagged (PP) cache
- PV caches can only make sense with complex and unusual MMU designs
  - not considered here any further

Virtually-Indexed, Virtually-Tagged Cache

UNSW

- Also called
  - virtually-addressed cache
- Also (incorrectly) called
  - virtual cache
  - virtual address cache
- Uses virtual addresses only
  - can operate concurrently with MMU
  - still needs MMU lookup to determine access rights
- Used on-core

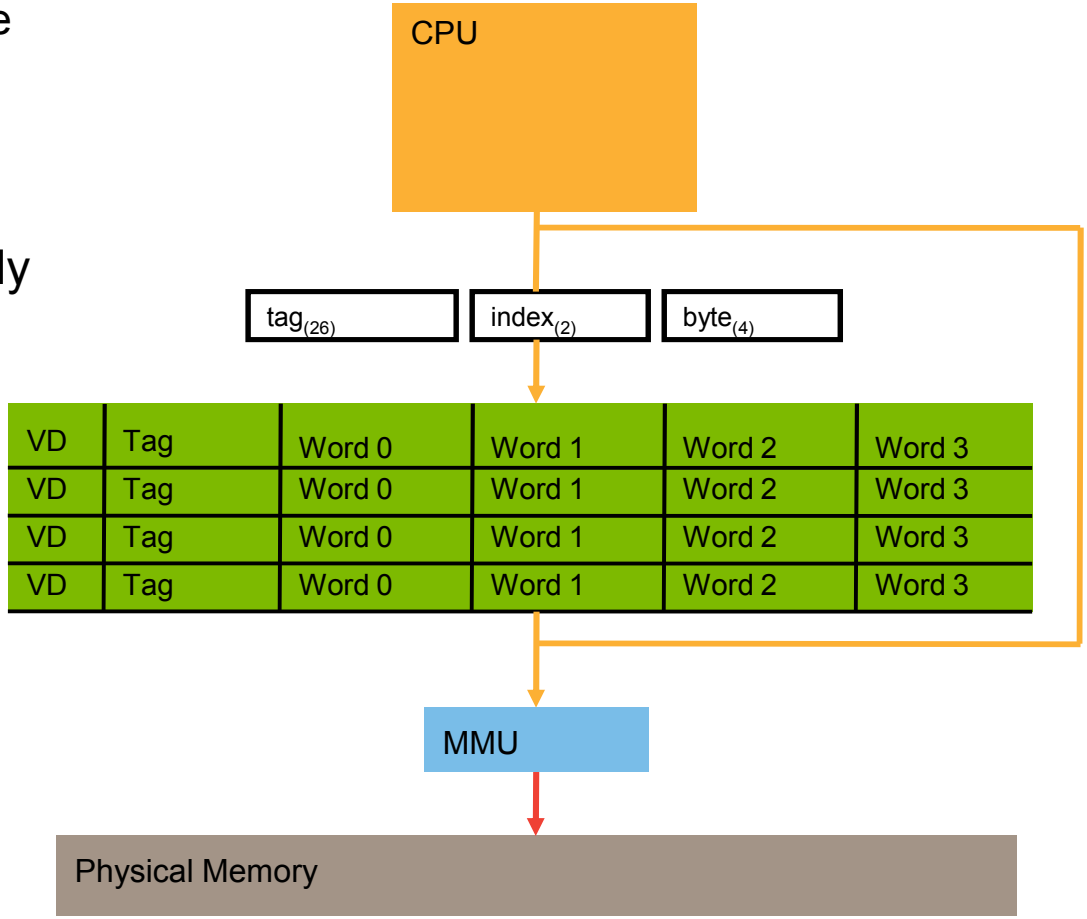

Virtually-Indexed, Physically-Tagged Cache

UNSW

- Virtual address for accessing line
- Physical address for tagging
- Needs address translation completed for retrieving data
- Indexing concurrent with MMU, use MMU output for tag check
- Typically used on-core

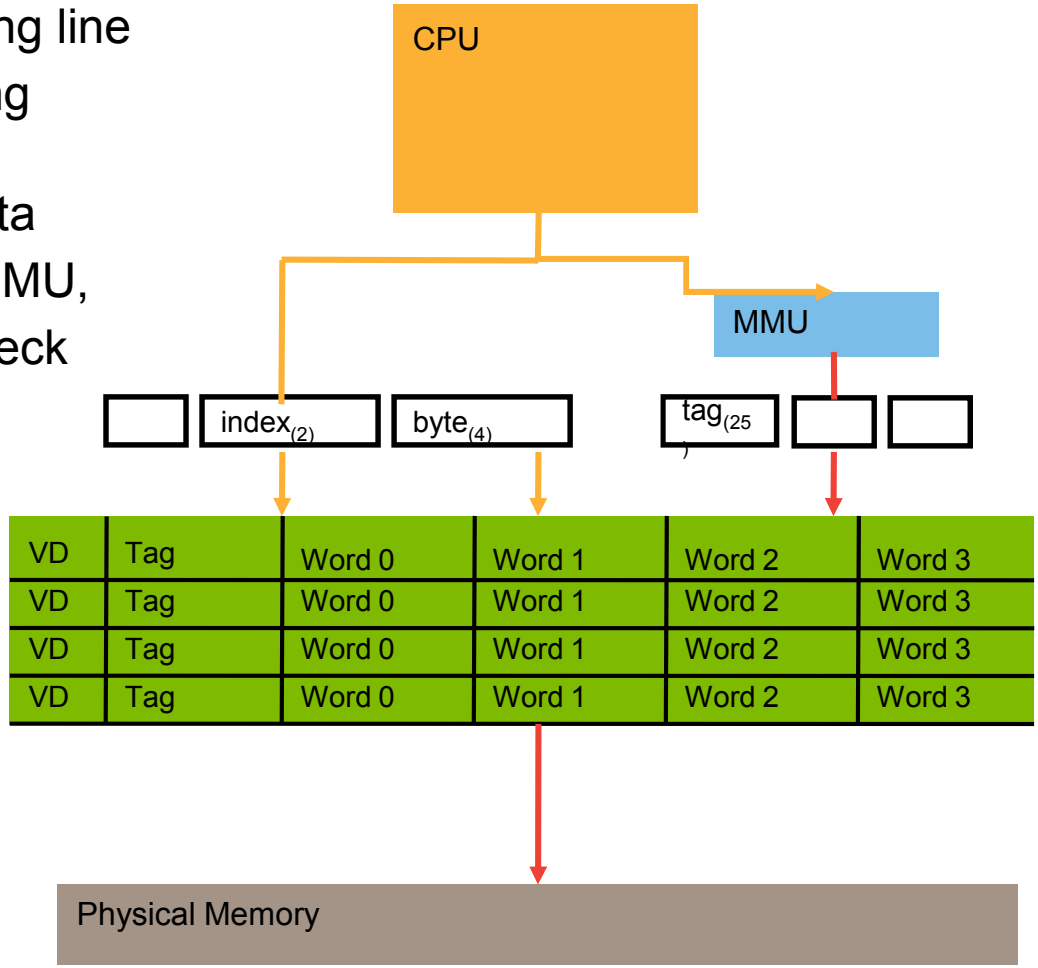

Physically-Indexed, Physically-Tagged Cache

UNSW

- Only uses physical addresses
- Needs address translation completed before begin of access
- Typically used off-core
- Note: page offset is invariant under virtual-address translation
  - if index bits are *subset* of offset, PP cache can be accessed without result of translation!
  - VP and PP cache become the same in this case
  - fast and suitable for on-core use

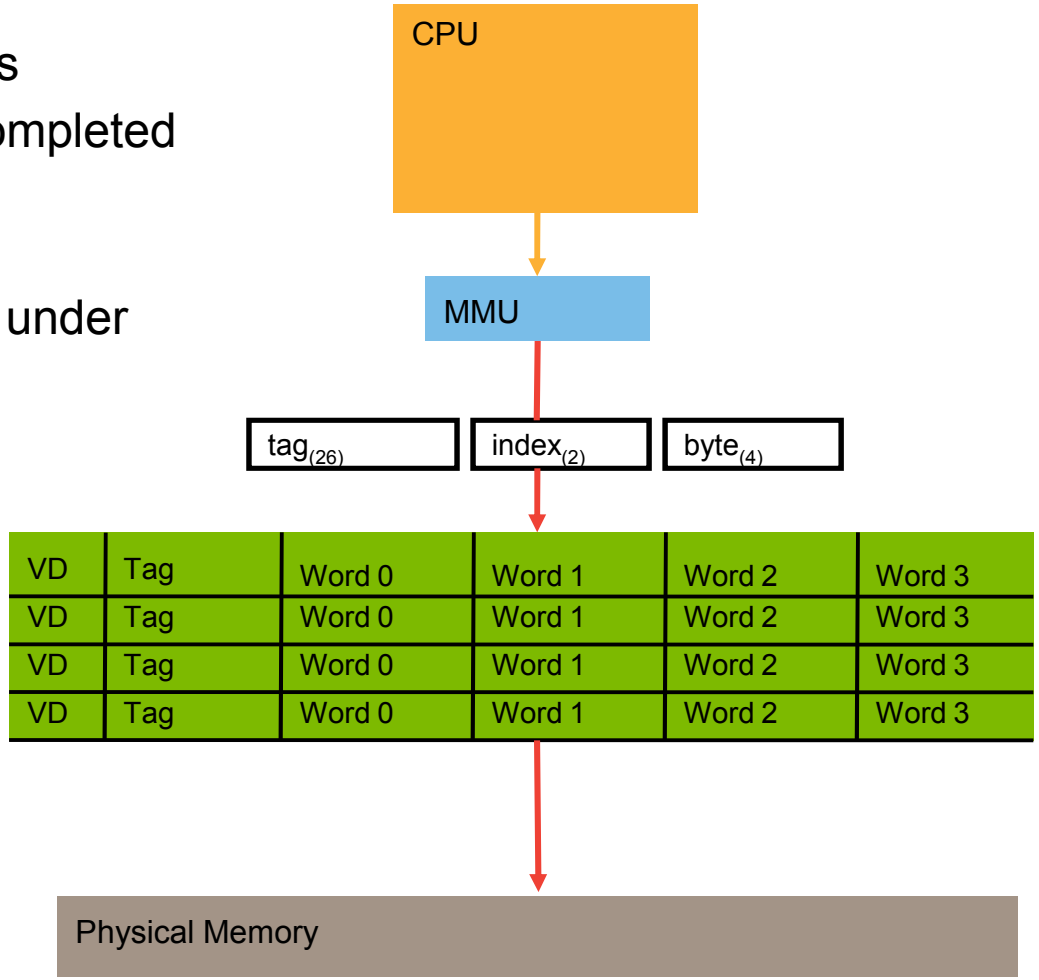

Cache Issues

UNSW

- Caches are managed by hardware transparent to software
  - OS doesn't have to worry about them, ~~right?~~ Wrong!
- Software-visible cache effects:
  - performance
  - *homonyms*:
    - same name, different data
    - can affect correctness!
  - *synonyms*:
    - different name, same data
    - can affect correctness!

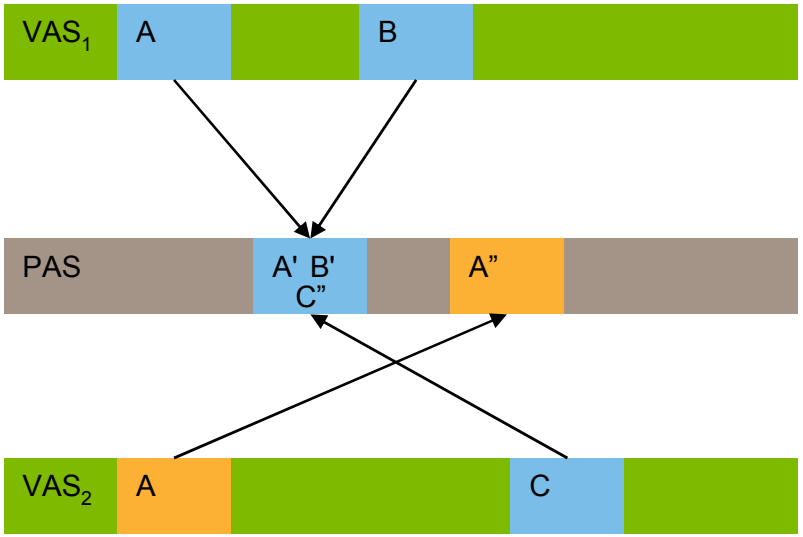

Virtually-Indexed Cache Issues

UNSW

Homonyms — same name for different data:

- Problem: VA used for indexing is context dependent
  - same VA refers to different PAs
  - tag does not uniquely identify data!
  - wrong data is accessed!
  - an issue for most OS!
- Homonym prevention:
  - flush cache on context switch
  - force non-overlapping
    - address-space layout
  - *tag* VA with *address-space ID* (ASID)
    - makes VAs global
  - use physical tags

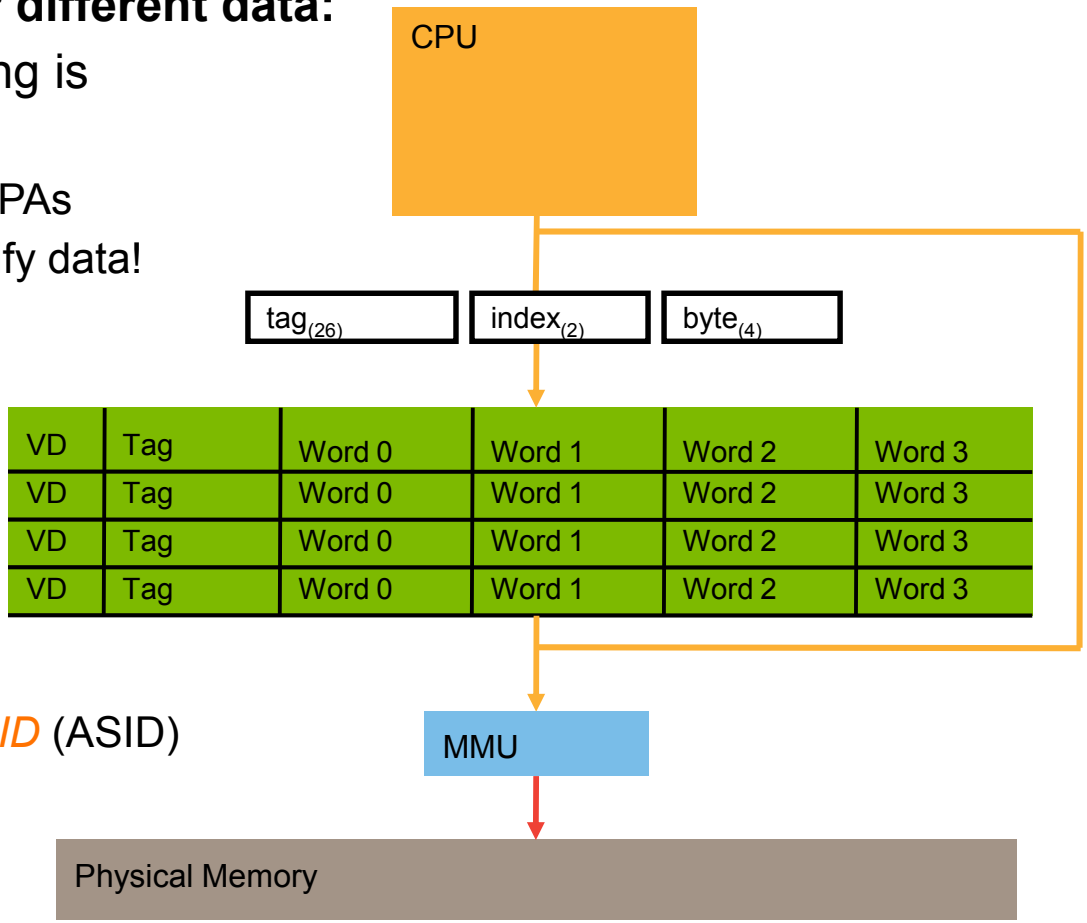

Virtually-Indexed Cache Issues

UNSW

Synonyms (aliases) — multiple names for same data:

- Several VAs map to the same PA
  - frames shared between processes
  - multiple mappings of frame within AS
- May access stale data:
  - same data cached in several lines
  - on write, one synonym updated
  - read on other synonym returns old value
  - physical tags don't help!
  - ASIDs don't help
- Are synonyms a problem?
  - depends on page and cache size
  - no problem for R/O data or I-caches

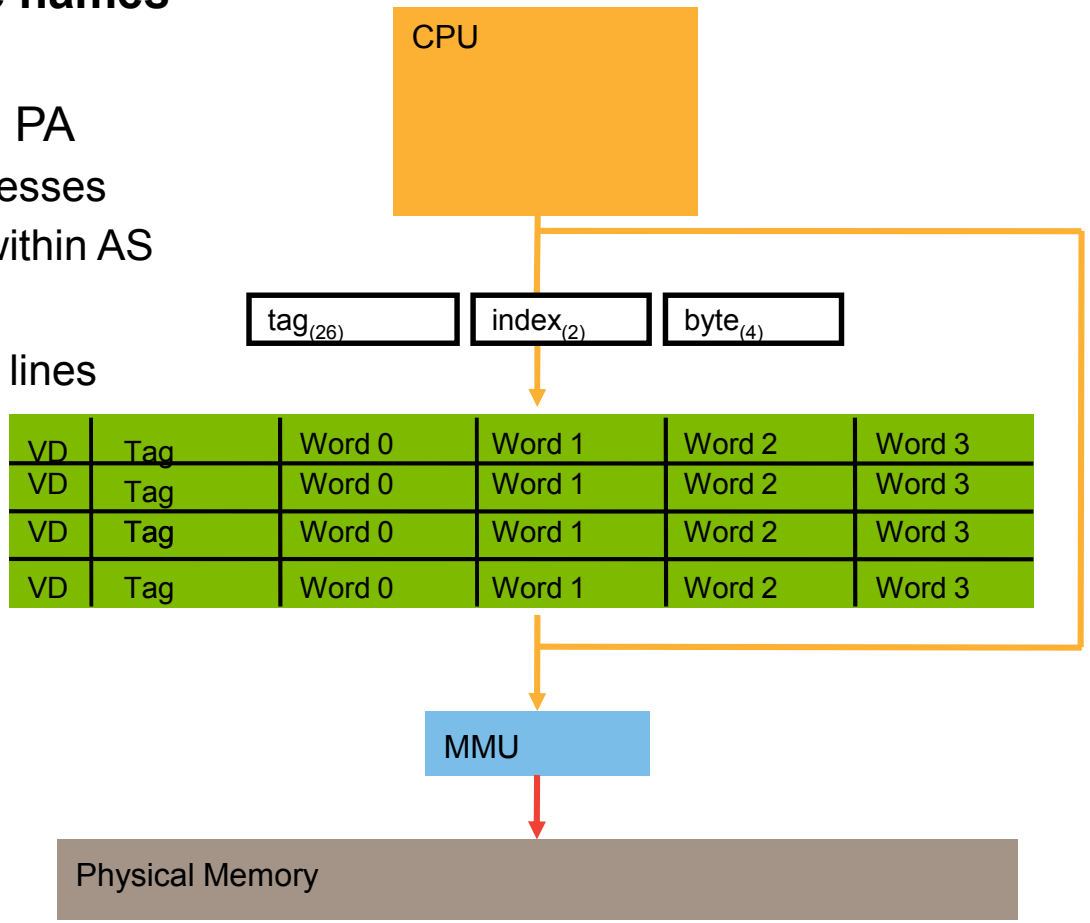

Example: MIPS R4X00 Synonyms

UNSW

- ASID-tagged, on-chip L1 VP cache
  - 16KiB cache with 32B lines, 2-way set associative
  - 4KiB (base) page size
  - set size = 16KiB/2 = 8 KiB > page size
  - overlap of tag and index bits, but come from different addresses!

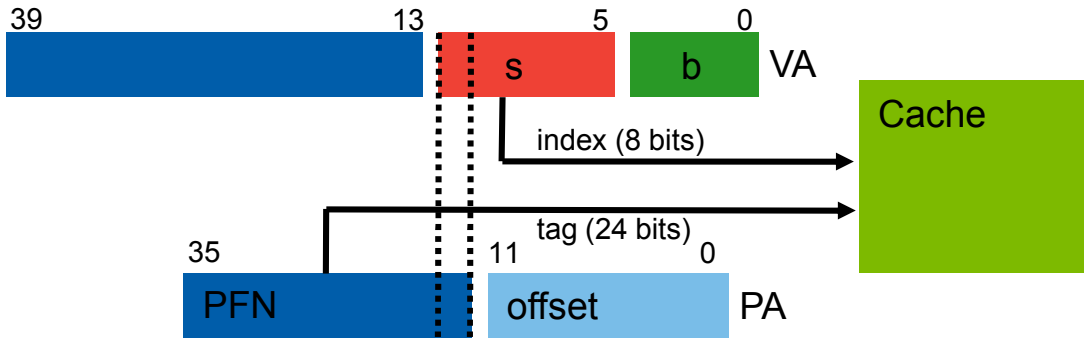

- Remember, location of data in cache determined by index
  - tag only confirms whether it's a hit!
  - synonym problem iff $VA_{12} \neq VA'_{12}$
  - similar issues on other processors, eg. ARM11 (set size 16KiB, page size 4KiB)

Address Mismatch Problem: Aliasing

UNSW

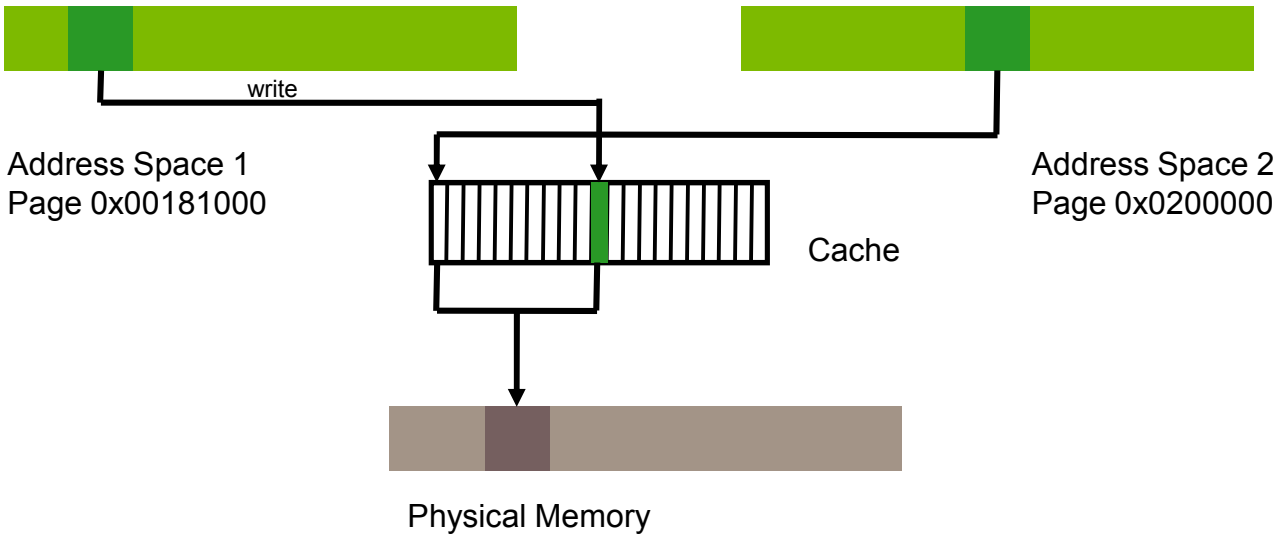

- Page aliased in different address spaces
  - AS_1: $VA_{12} = 1$, AS_2: $VA_{12} = 0$
- One alias gets modified
  - in a write-back cache, other alias sees stale data
  - lost-update problem

Address Mismatch Problem: Re-Mapping

UNSW

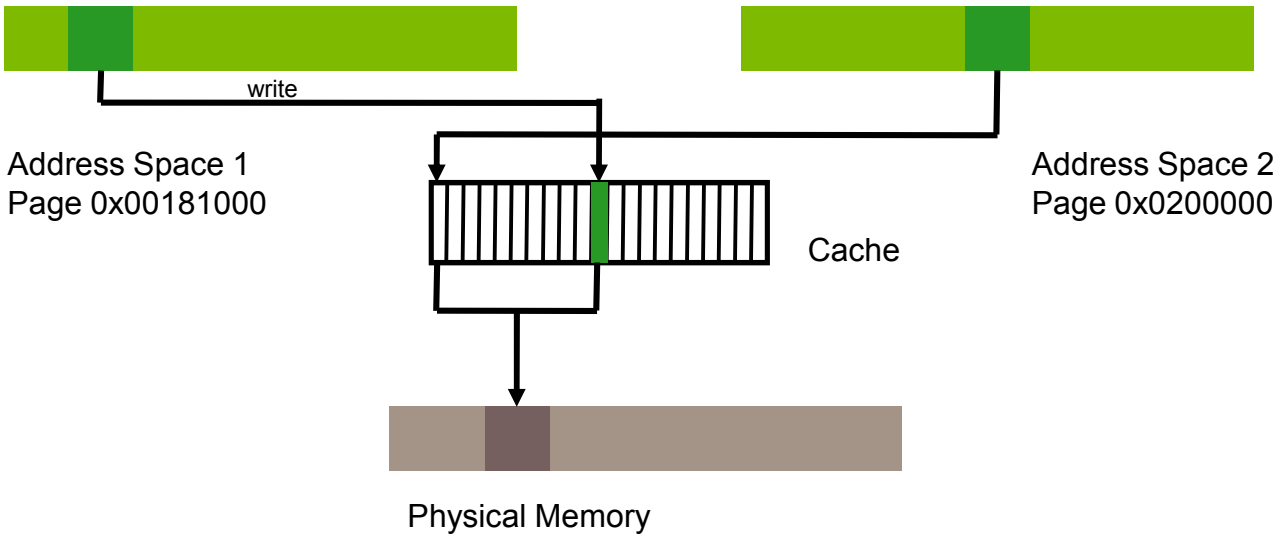

- Unmap page with a dirty cache line
- Re-use (remap) frame for a different page (in same or different AS)
- Write to new page
  - without mismatch, new write will overwrite old (hits same cache line)
  - with mismatch, order can be reversed: “cache bomb”

DMA Consistency Problem

UNSW

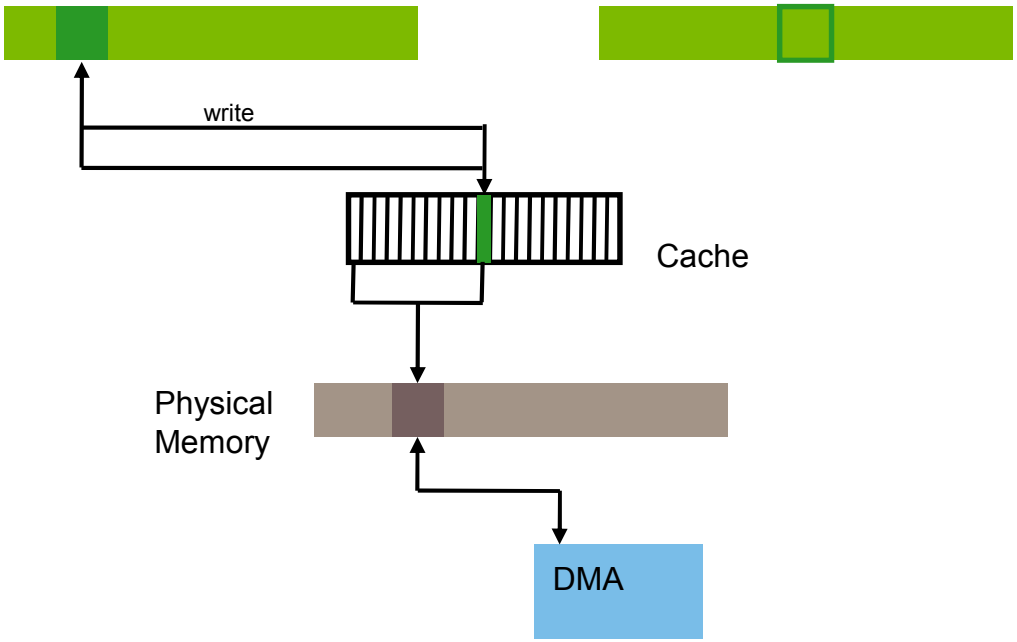

→ DMA (normally) uses physical addresses and bypasses cache

- CPU access inconsistent with device access
- need to flush cache before device write
- need to invalidate cache before device read

Avoiding Synonym Problems

UNSW

- Hardware synonym detection
- Flush cache on context switch
  - doesn't help for aliasing *within address space*
- Detect synonyms and ensure
  - all read-only, OR
  - only one synonym mapped
- Restrict VM mapping so synonyms map to same cache set
  - e.g., R4x00: ensure that $VA_{12} = PA_{12}$

Summary: VV Caches

UNSW

- ✓ Fastest (don't rely on TLB for retrieving data)
  - × still need TLB lookup for protection
  - × or other mechanism to provide protection
- × Suffer from synonyms and homonyms
  - × requires flushing on context switch
    - × makes context switches expensive
    - × may even be required on kernel→user switch
  - ... or guarantee of no synonyms and homonyms
- × Require TLB lookup for write-back!
- → Used on MC68040, i860, ARM7/ARM9/StrongARM/Xscale
- → Used for I-caches on a number of architectures
  - Alpha, Pentium 4, ...

Summary: Tagged VV Caches

UNSW

- → Add *address-space identifier* (ASID) as part of tag
- → On access compare with CPU's ASID register
- ✓ Removes homonyms
  - ✓ potentially better context switching performance
  - ✗ ASID recycling still requires cache flush
- ✗ Doesn't solve synonym problem (but that's less serious)
- ✗ Doesn't solve write-back problem

Summary: VP Caches

UNSW

- → Medium speed:
  - ✓ lookup in parallel with address translation
  - ✗ tag comparison after address translation
- ✓ No homonym problem
- ✗ Potential synonym problem
- ✗ Bigger tags (cannot leave off set-number bits)
  - ✗ increases area, latency, power consumption
- → Used on most modern architectures for L1 cache

Summary: PP Caches

UNSW

- Slowest
  - requires result of address translation before lookup starts
- No synonym problem
- No homonym problem
- Easy to manage
- If small or highly associative (all index bits come from page offset) indexing can be in parallel with address translation.
  - Potentially useful for L1 cache (used on Itanium)
- Cache can use *bus snooping to receive/supply DMA data*
- Usable as off-chip cache with any architecture
- For an in-depth coverage of caches see [Wiggins 03]

Write Buffer

UNSW

- Store operations can take a long time to complete
  - e.g. if a cache line must be read or allocated
- Can avoid stalling the CPU by buffering writes
- *Write buffer* is a FIFO *queue of incomplete stores*
  - also called *store buffer* or *write-behind buffer*
- Can also read intermediate values out of buffer
  - to service load of a value that is still in write buffer
  - avoids unnecessary stalls of load operations
- Implies that memory contents are temporarily stale
  - on a multiprocessor, CPUs see different order of writes
  - "weak store order", to be revisited in SMP context

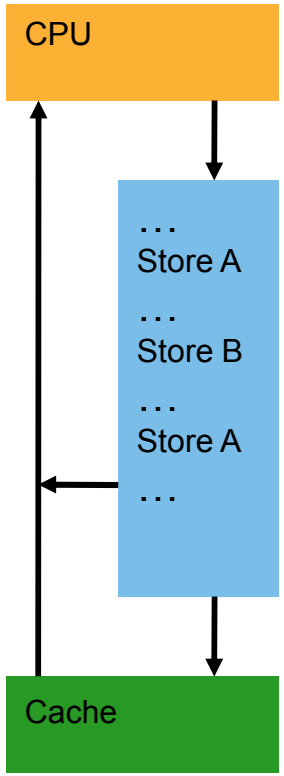

Cache Hierarchy

UNSW

- Hierarchy of caches to balance memory accesses:
  - small, fast, virtually indexed L1
  - large, slow, physically indexed L2–L5
- Each level reduces and clusters traffic.
- L1 typically split into instruction and data caches.
  - requirement of pipelining
- Low levels tend to be unified.
- Chip multiprocessors (multicores) often share on-chip L2, L3

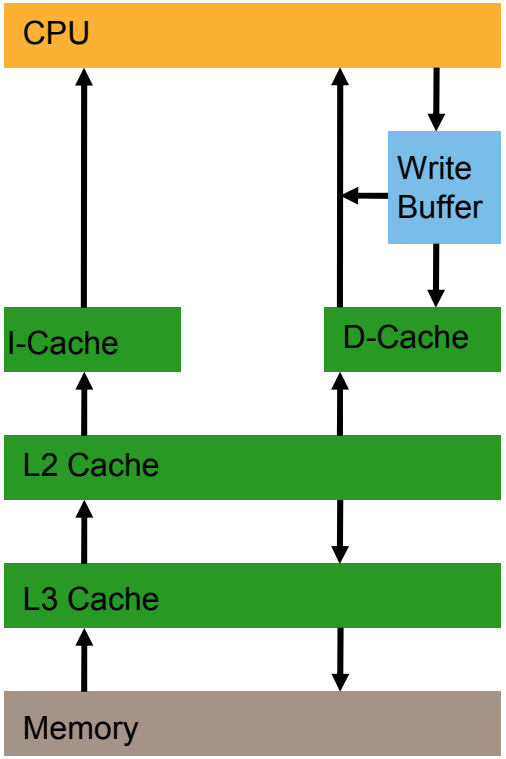

Translation Lookaside Buffer (TLB)

UNSW

- TLB is a (VV) cache for page-table entries
- TLB can be:
  - hardware loaded, transparent to OS, or
  - software loaded, maintained by OS
- TLB can be:
  - split, instruction and data TLBs, or
  - unified
- Modern high-performance architectures use a hierarchy of TLBs:
  - top-level TLB is hardware-loaded from lower levels
  - transparent to OS

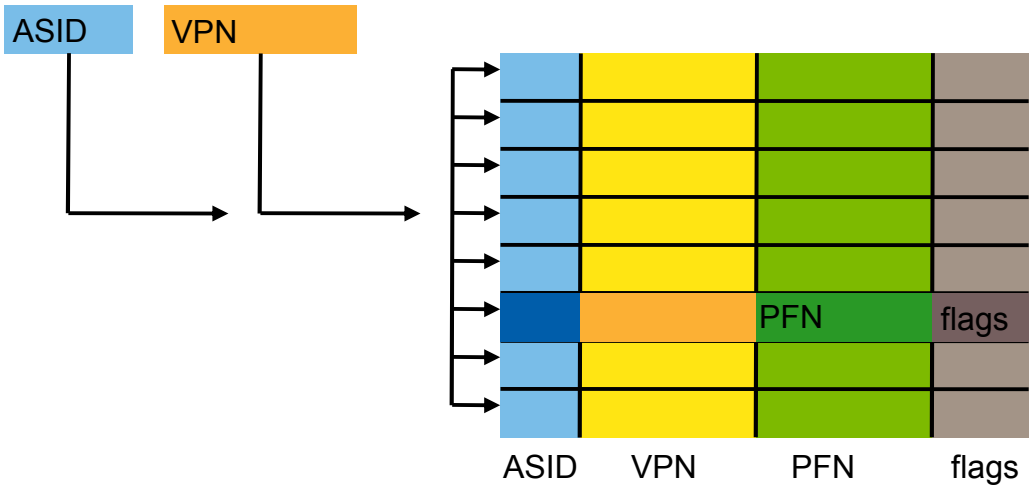

TLB Issues: Associativity

UNSW

- First TLB (VAX-11/780, [Clark, Emer 85]) was 2-way associative
- Most modern architectures have fully associative TLBs
- Exceptions:
  - i486 (4-way)
  - Pentium, P6 (4-way)
  - IBM RS/6000 (2-way)
- Reasons:
  - modern architectures tend to support multiple page sizes (superpages)
    - better utilises TLB entries
  - TLB lookup done without knowing the page's base address
  - superpage TLBs are fully-associative

TLB Size (I-TLB + D-TLB)

UNSW

Architecture	TLB Size	Page Size	TLB Coverage
VAX	64–256	512B	32–128KiB
ix86	32–32+64	4KiB+4MiB	128–128+256KiB
MIPS	96–128	4KiB–16MiB	384KiB–...
SPARC	64	8KiB–4MiB	512KiB–...
Alpha	32–128+128	8KiB–4MiB	256KiB–...
RS/6000	32+128	4KiB	128+512KiB
Power-4/G5	128	4KiB+16MiB	512KiB–...
PA-8000	96+96	4KiB–64MiB	
Itanium	64+96	4KiB–4GiB	

Not much growth in 20 years!

TLB Size (I-TLB + D-TLB)

UNSW

TLB coverage

- → Memory sizes are increasing
- → Number of TLB entries are more-or-less constant
- → Page sizes are growing *very slowly*
  - total amount of RAM mapped by TLB is not changing much
  - fraction of RAM mapped by TLB is shrinking dramatically
- → Modern architectures have very low *TLB coverage*
- → Also, many modern architectures have software-loaded TLBs
  - General increase in TLB miss handling cost
- → The TLB is becoming a performance bottleneck

Address Space Usage vs. TLB Coverage

UNSW

- Each TLB entry maps one virtual page
- On TLB miss, reloaded from page table (PT), which is in memory
  - Some TLB entries need to map page table
  - E.g. 32-bit page table entries, 4KiB pages
  - One PT page maps 4MiB
- Traditional UNIX process has 2 regions of allocated virtual address space:
  - low end: text, data, heap
  - high end: stack
  - 2–3 PT pages are sufficient to map most address spaces
- Superpages can be used to extend TLB coverage
  - however, difficult to manage in the OS

Sparse Address-Space Use

UNSW

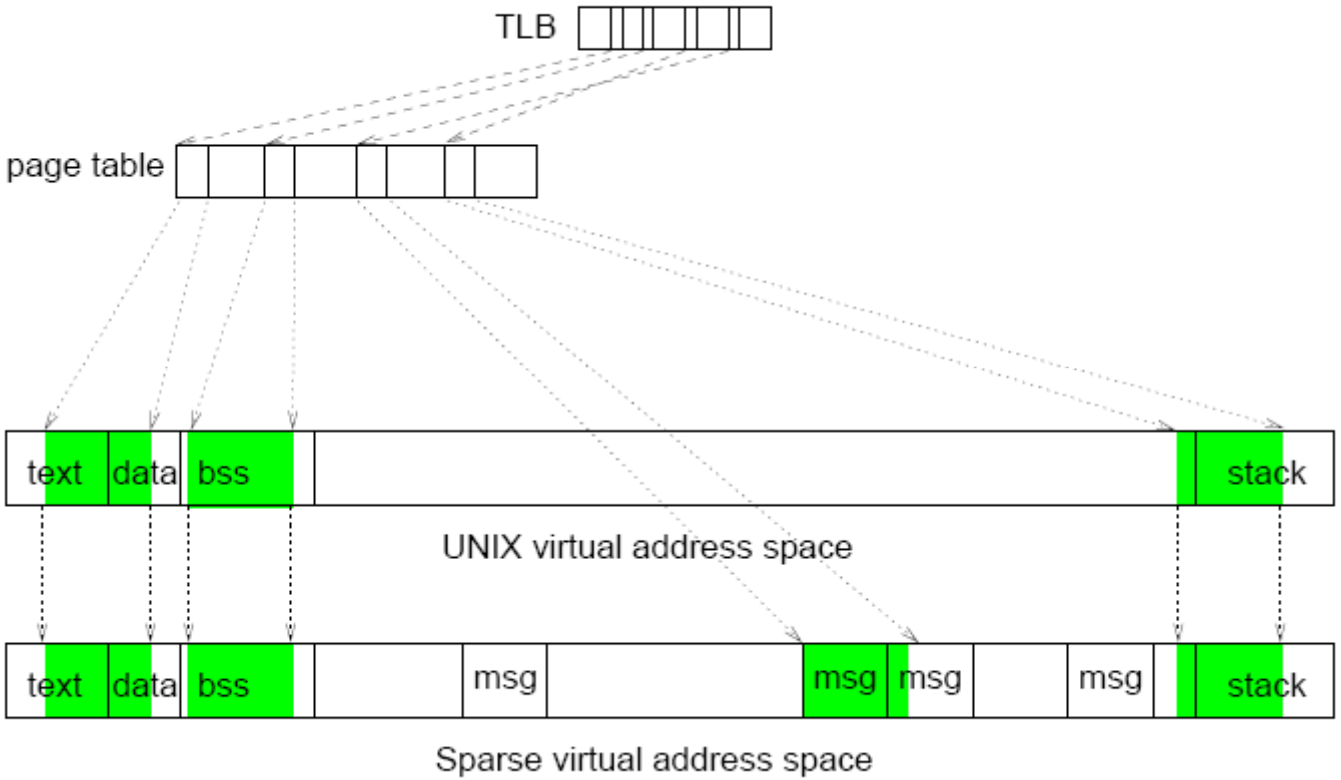

Ties up many TLB entries for mapping page tables

Origins of Sparse Address-Space Use

UNSW

- Modern OS features:
  - memory-mapped files
  - dynamically-linked libraries
  - mapping IPC (server-based systems)...
- This problem gets worse 64-bit address spaces:
  - bigger page tables
- An in-depth study of such effects can be found in [Uhlig et al. 94]