Device Drivers

COMP9242

2009/S2 Week 9

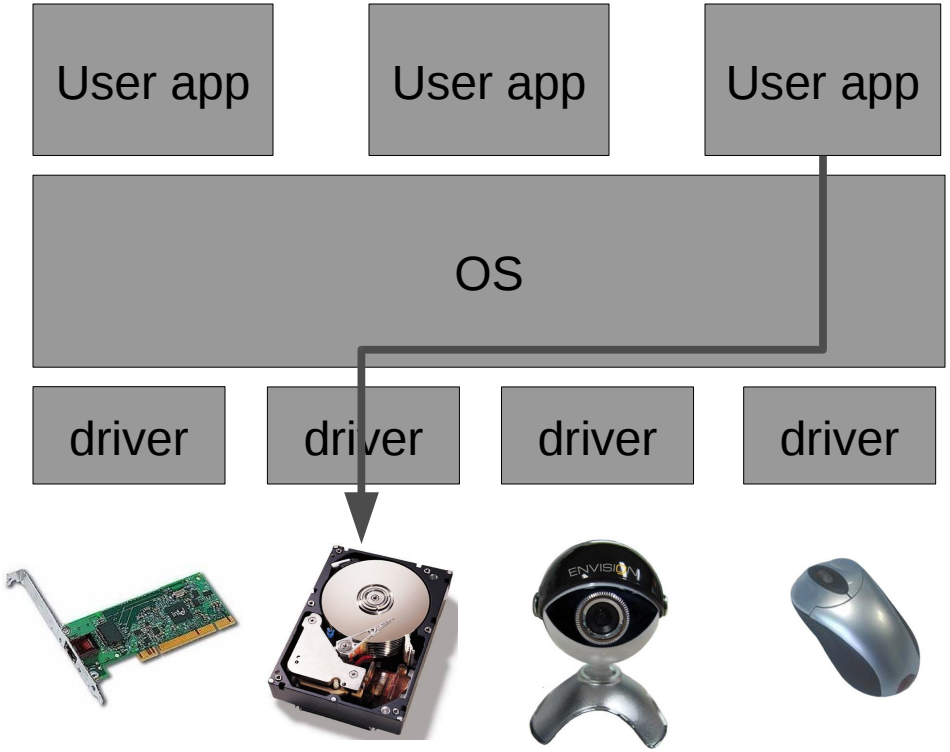
User app
User app
User app
OS
driver
driver
driver
driver

Some statistics

- 70% of OS code is in device drivers
  - 3,448,000 out of 4,997,000 loc in Linux 2.6.27
- A typical Linux laptop runs ~240,000 lines of kernel code, including ~72,000 loc in 36 different device drivers
- Drivers contain 3—7 times more bugs per loc than the rest of the kernel
- 70% of OS failures are caused by driver bugs

Lecture outline

- Part 1: Introduction to device drivers
- Part 2: Overview of research on device driver reliability
- Part 3: Device drivers research at ERTOS

Part 1: Introduction to device drivers

Functions of a driver

- Encapsulation
  - Hides low-level device protocol details from the client
- Unification
  - Makes similar devices look the same
- Protection (in cooperation with the OS)
  - Only authorised applications can use the device
- Multiplexing (in cooperation with the OS)
  - Multiple applications can use the device concurrently

OS archeology

The first (?) device drivers: I/O libraries for the IBM 709 batch processing system [1958]

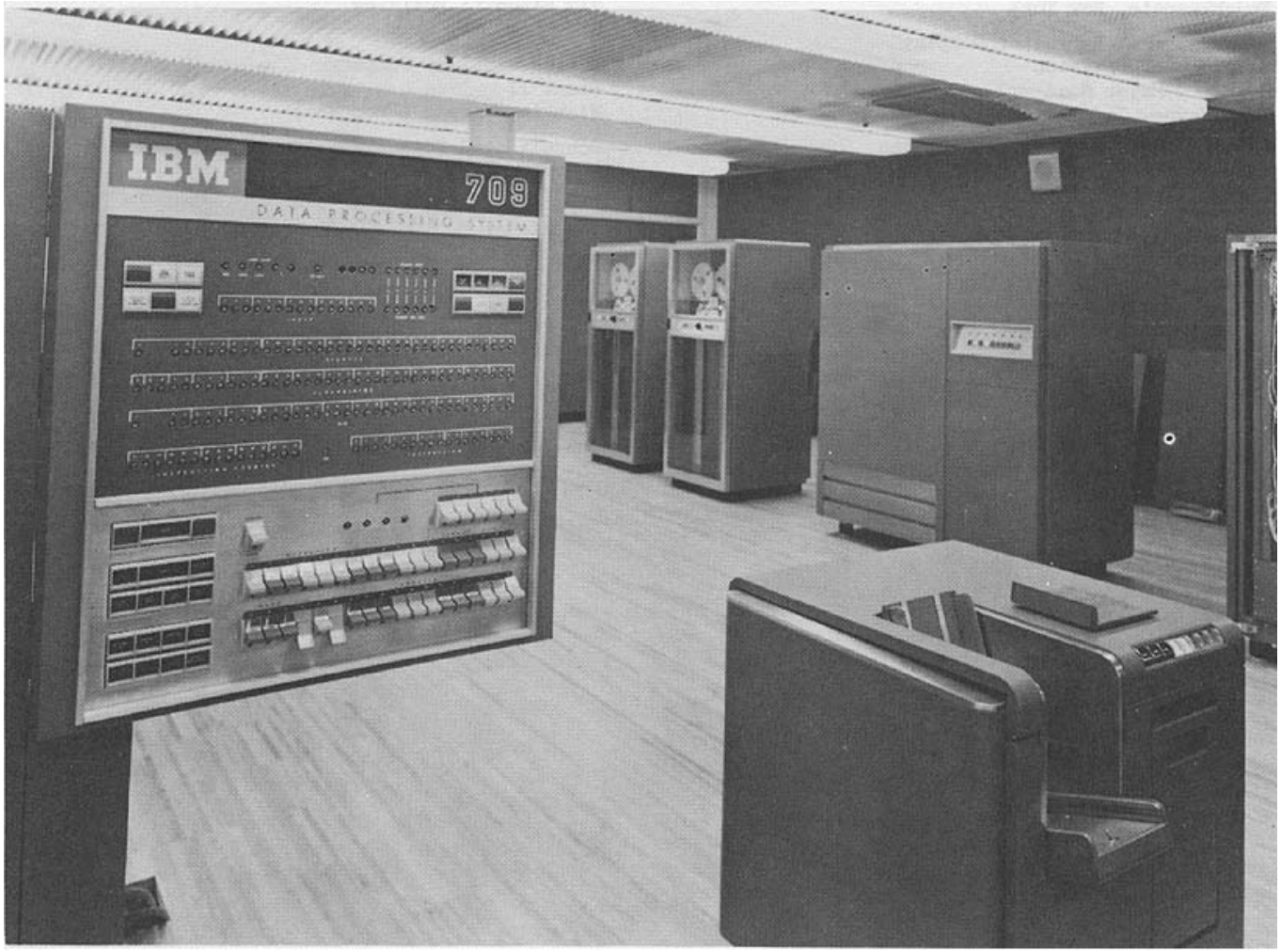

OS archeology

The first (?) device drivers: I/O libraries for the IBM 709 batch processing system [1958]

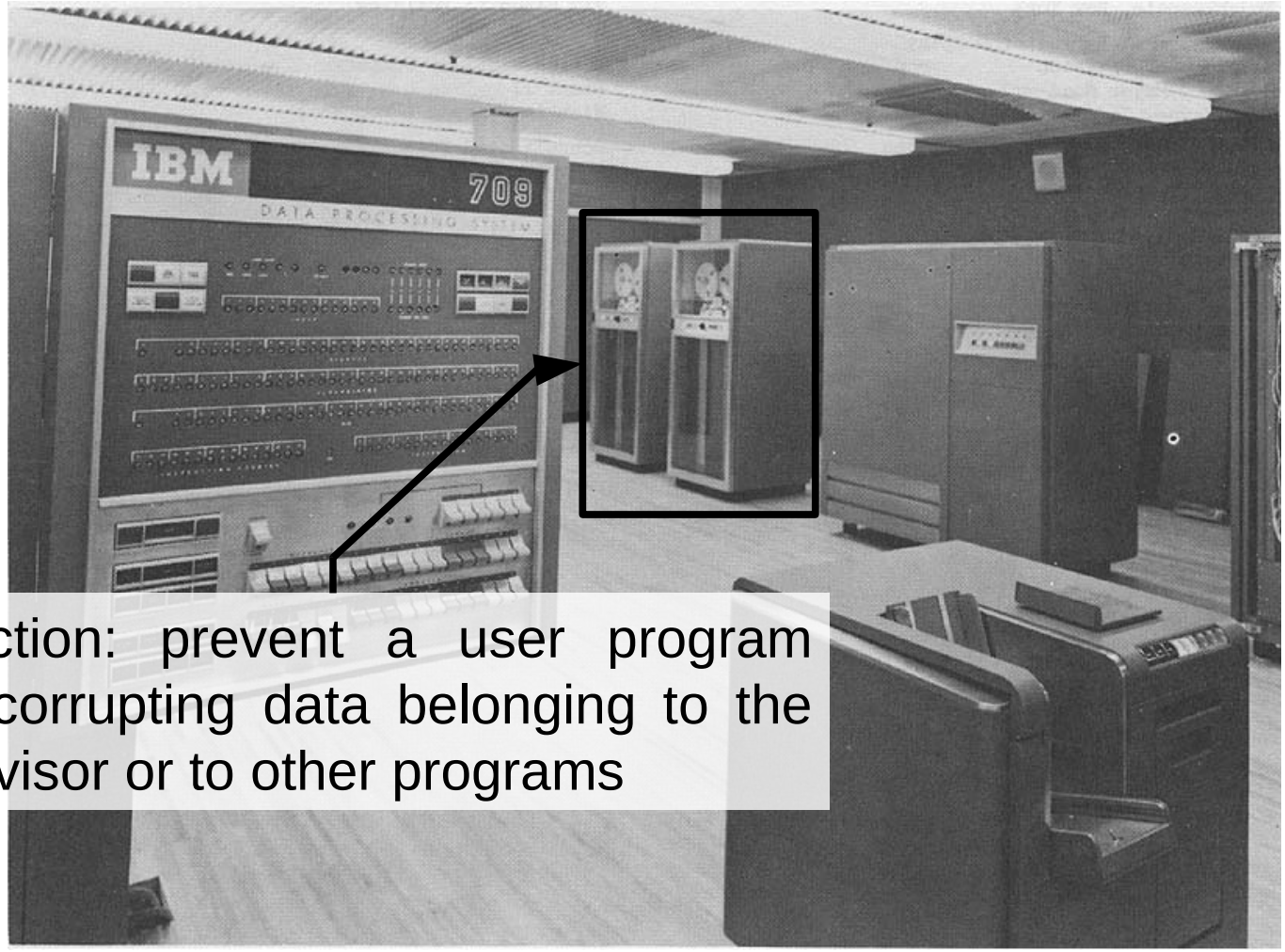

Protection: prevent a user program from corrupting data belonging to the supervisor or to other programs

OS archeology

IBM 7090 [1959] introduced I/O channels, which allowed I/O and computation to overlap

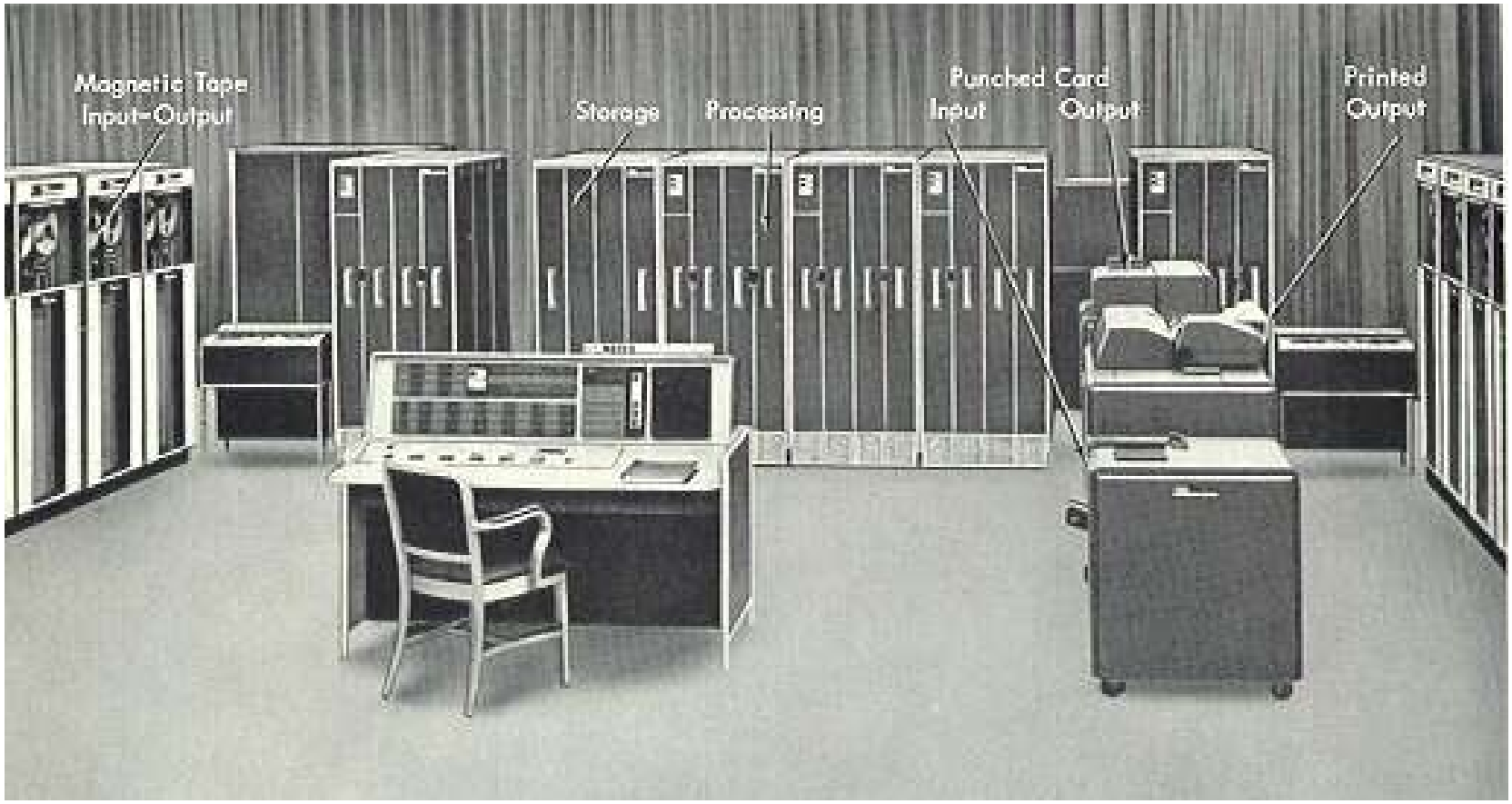

OS archeology

IBM 7090 [1959] introduced I/O channels, which allowed I/O and computation to overlap

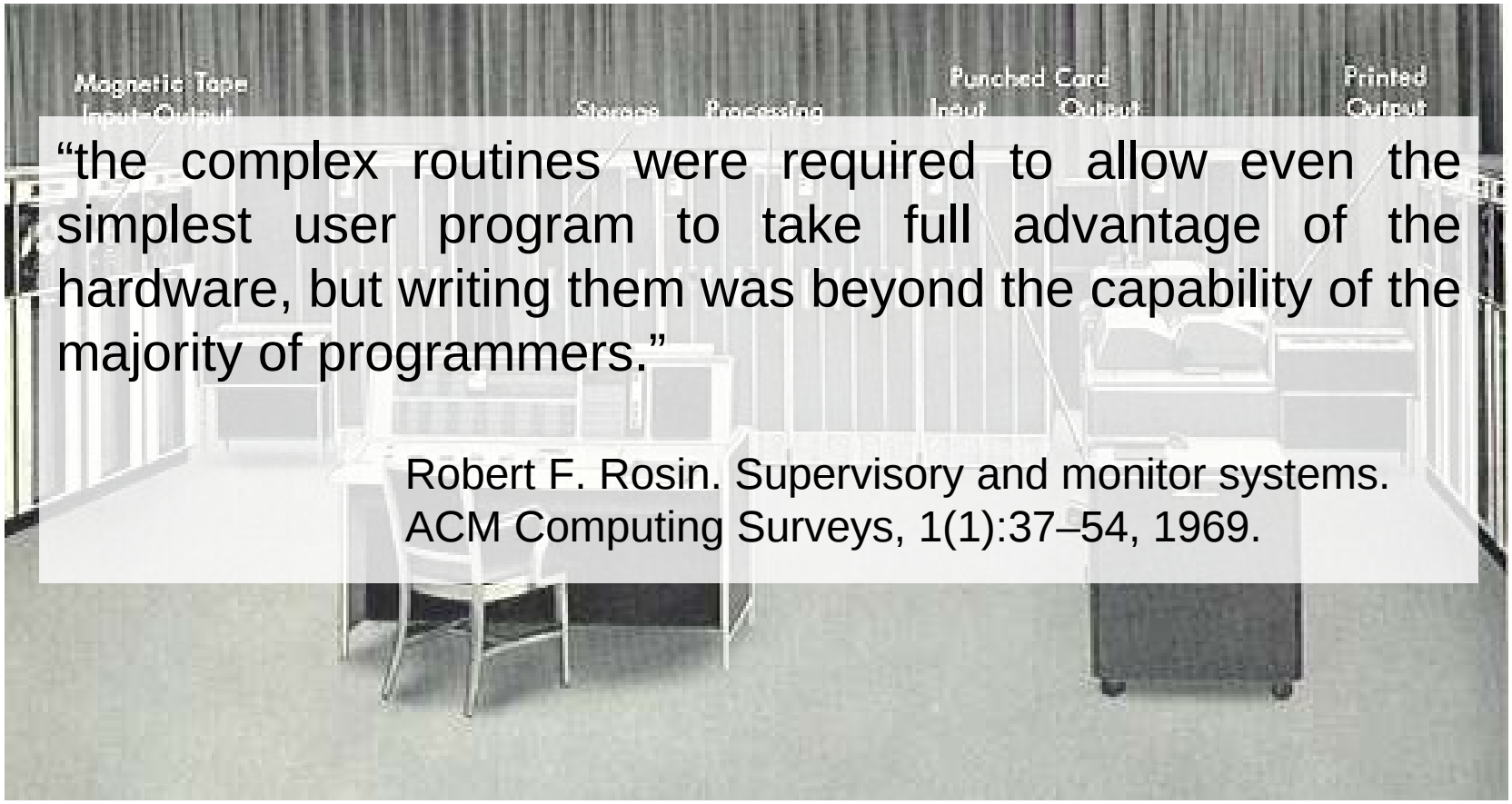

"the complex routines were required to allow even the simplest user program to take full advantage of the hardware, but writing them was beyond the capability of the majority of programmers."

Robert F. Rosin. Supervisory and monitor systems. ACM Computing Surveys, 1(1):37–54, 1969.

OS archeology

IBM 7094 [1962] supported a wide range of peripherals: tapes, disks, teletypes, flexowriters, etc.

OS archeology

IBM 7094 [1962] supported a wide range of peripherals: tapes, disks, teletypes, flexowriters, etc.

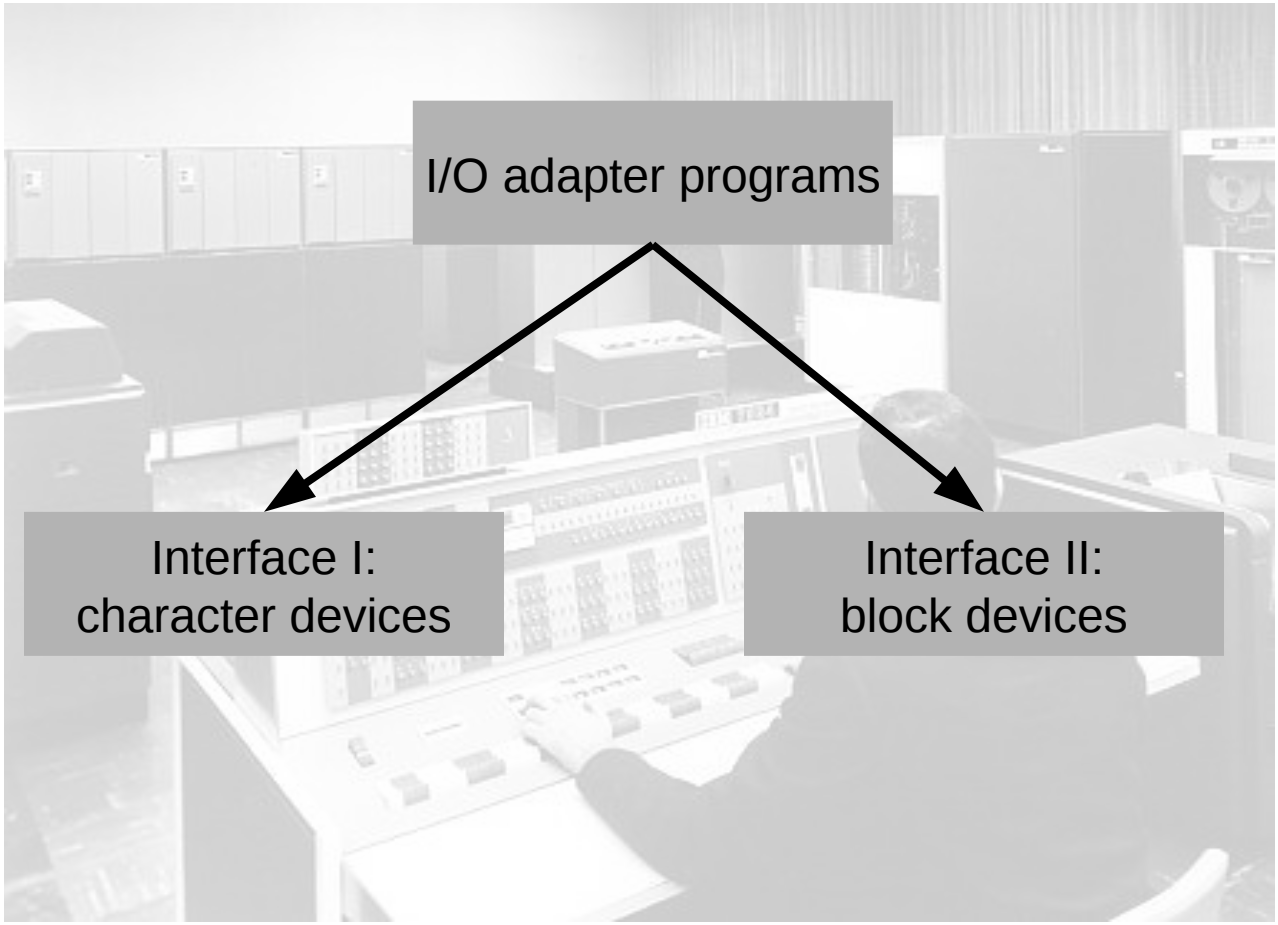

OS archeology

GE-635 [1963] introduced the master CPU mode. Only the hypervisor running in the master mode could execute I/O instructions

I/O devices in a typical desktop system

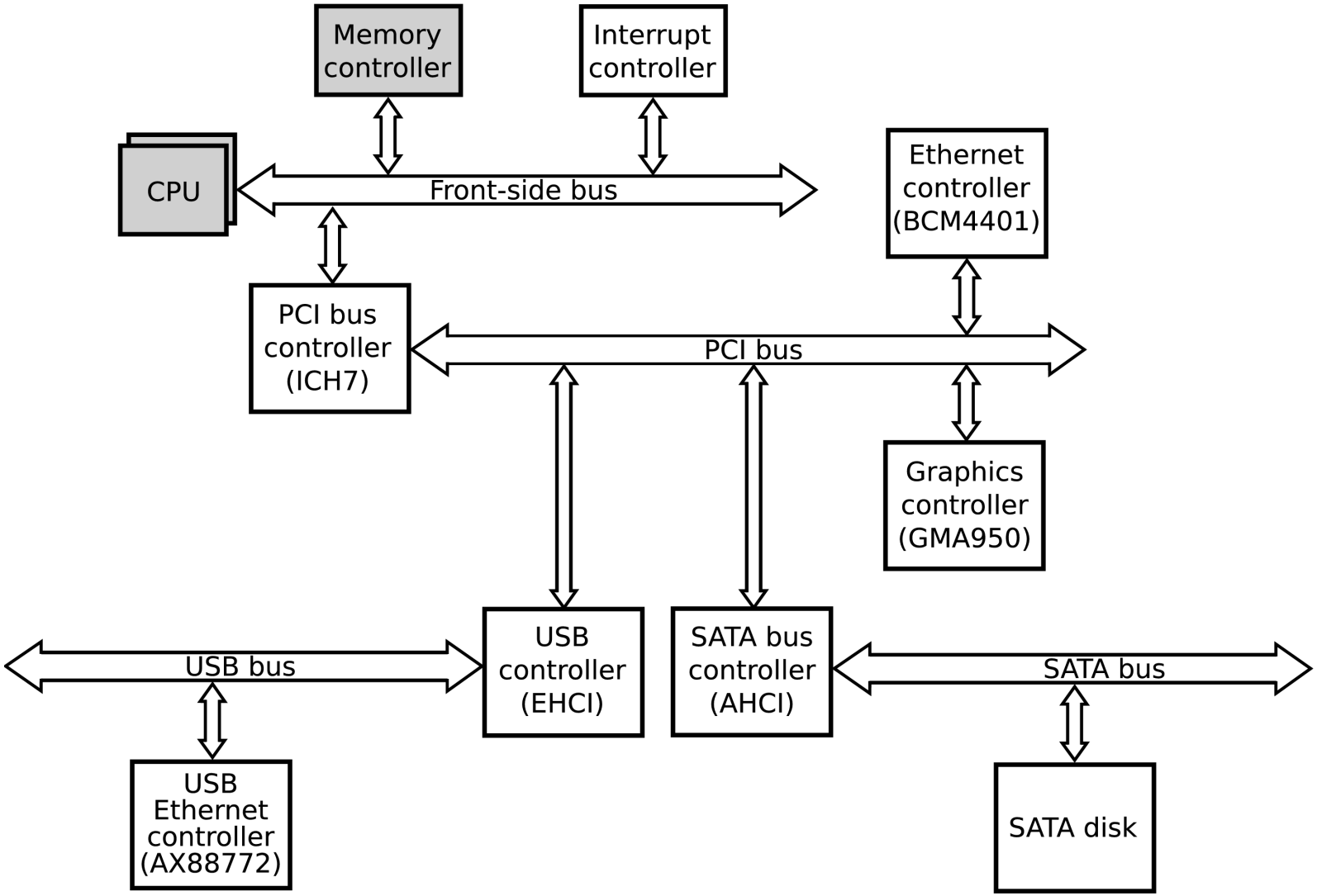

PCI bus overview

- PCI bus
  - Conventional PCI
    - Developed and standardised in early 90's
    - 32 or 64 bit shared parallel bus
    - Up to 66MHz (533MB/s)
  - PCI-X
    - Up to 133MHz (1066MB/s)
  - PCI Express
    - Consists of serial p2p links
    - Software-compatible with conventional PCI
    - Up to 16GB/s per device

PCI bus overview: memory space

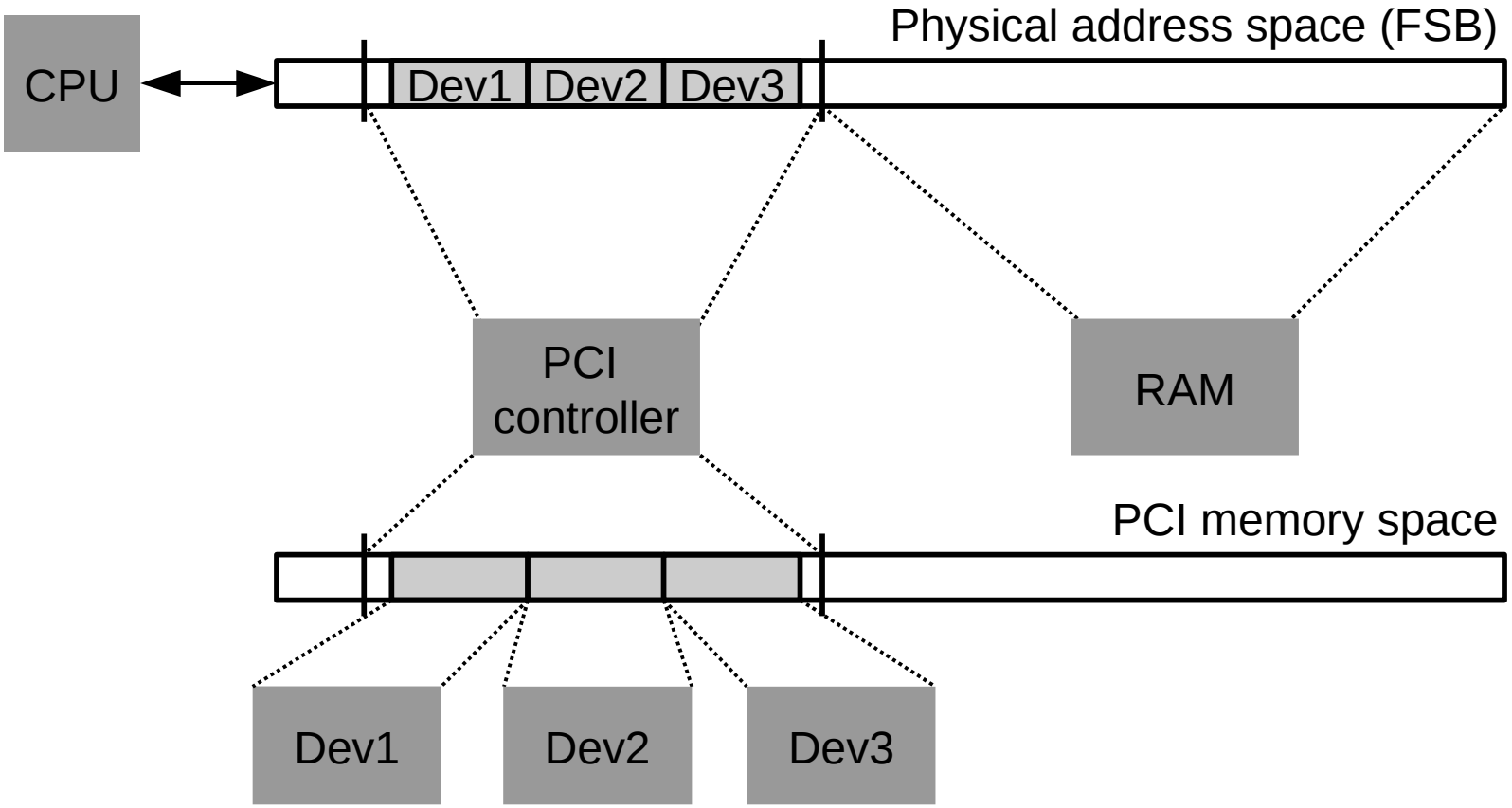

PCI bus overview: DMA

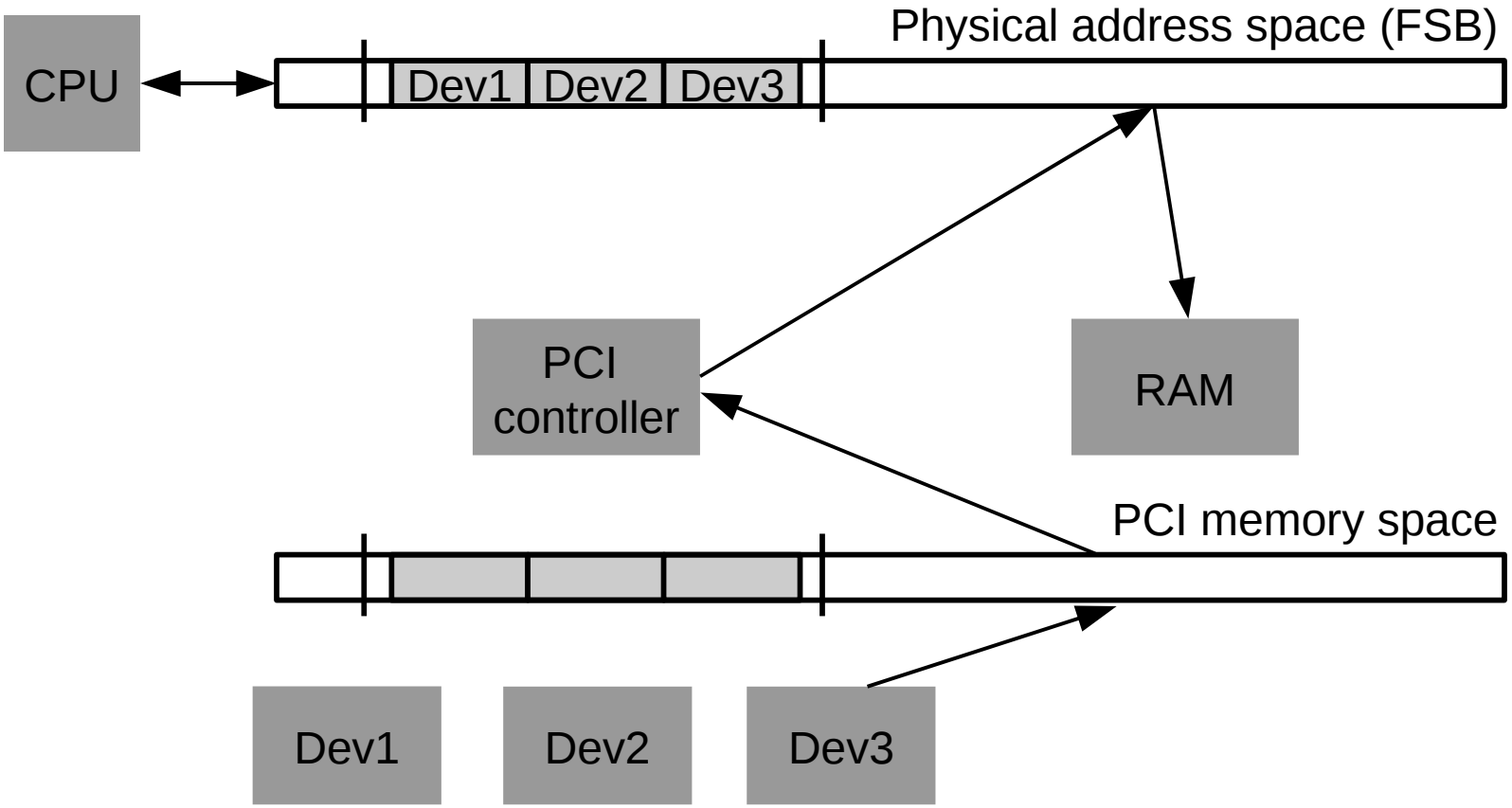

PCI bus overview: interrupts

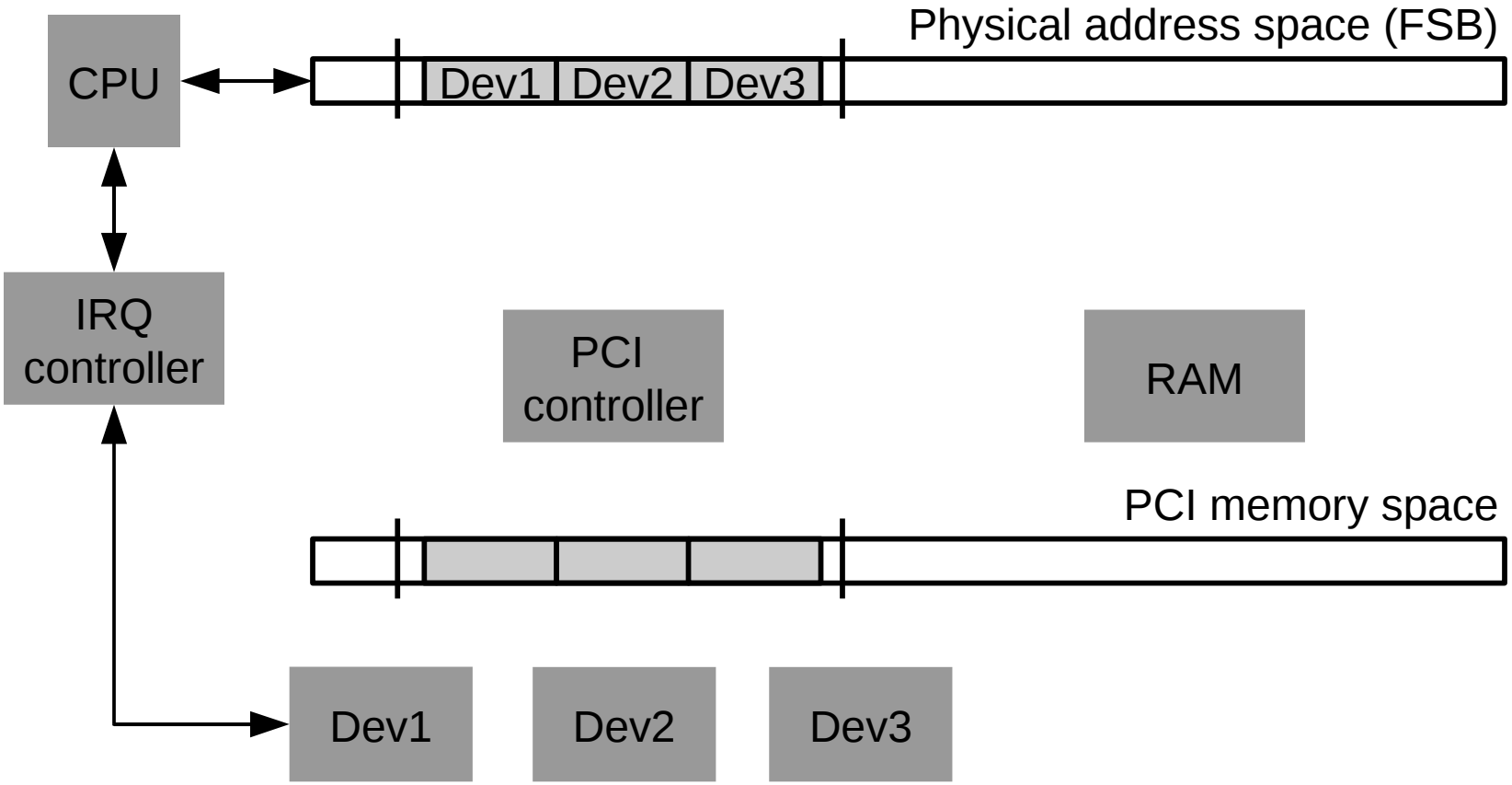

PCI bus overview: config and I/O spaces

NICTA

- PCI configuration space
  - Used for device enumeration and configuration
  - Contains standardised device descriptors
- I/O space
  - obsolete

USB bus overview

- USB bus
  - Host-centric
  - Distributed-system-style architecture
  - Hot plug
  - Power management
    - Bus-powered and self-powered devices
  - USB 1.x
    - Up to 12Mb/s
  - USB 2.0
    - Up to 480Mb/s
  - USB 3.0
    - Up to 4.8Gb/s

USB bus overview

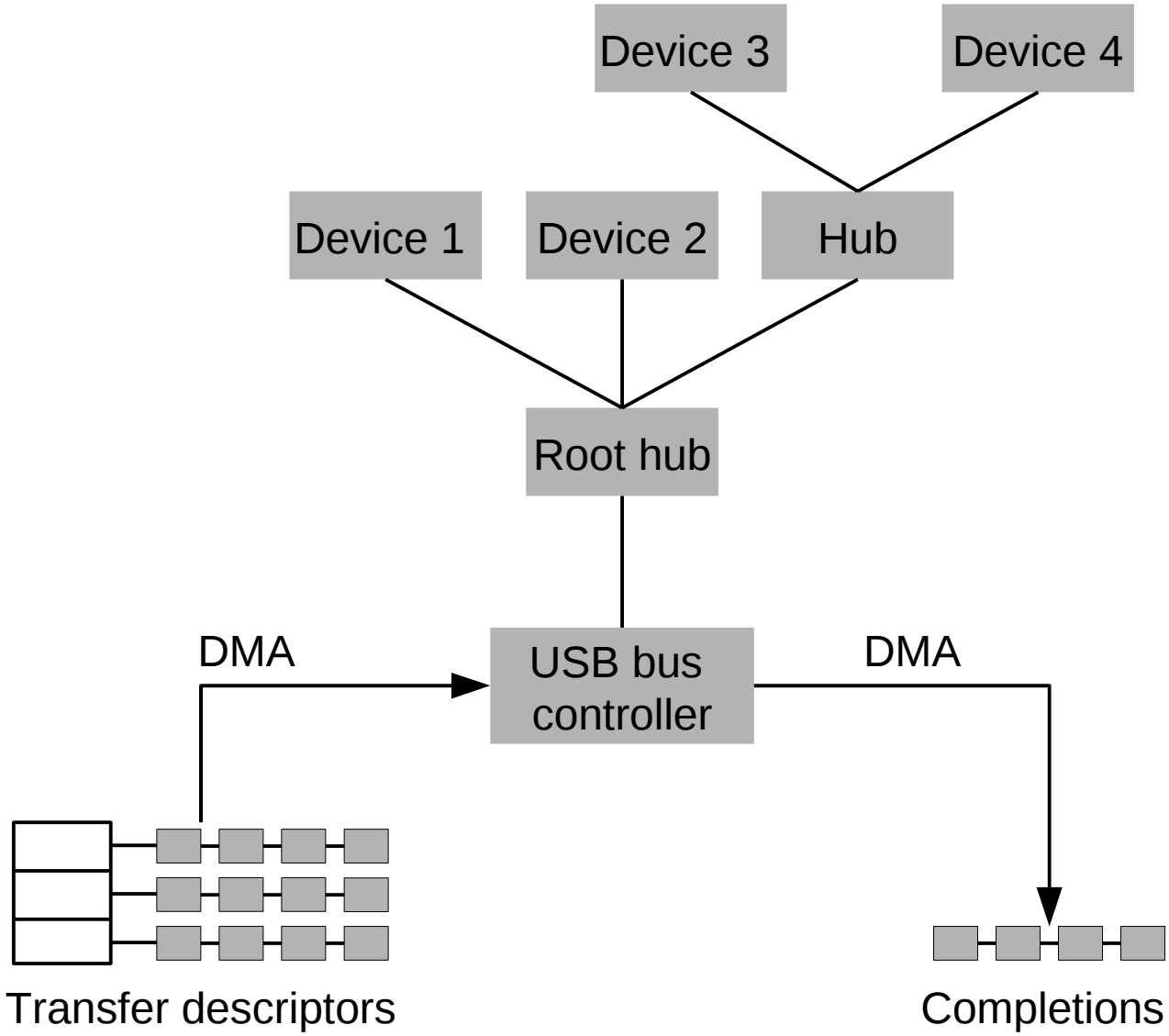

I/O devices in a typical desktop system

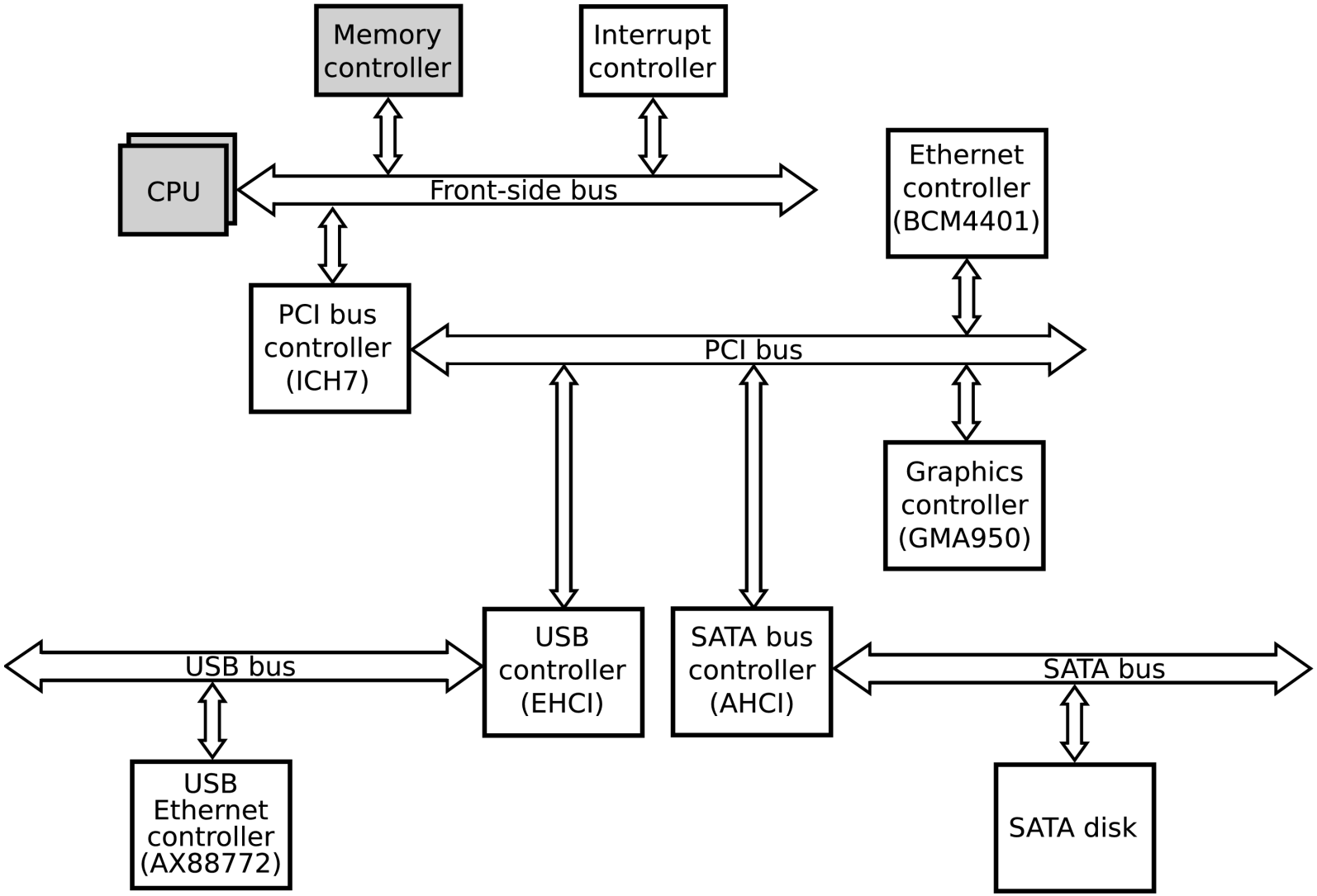

Driver stacking

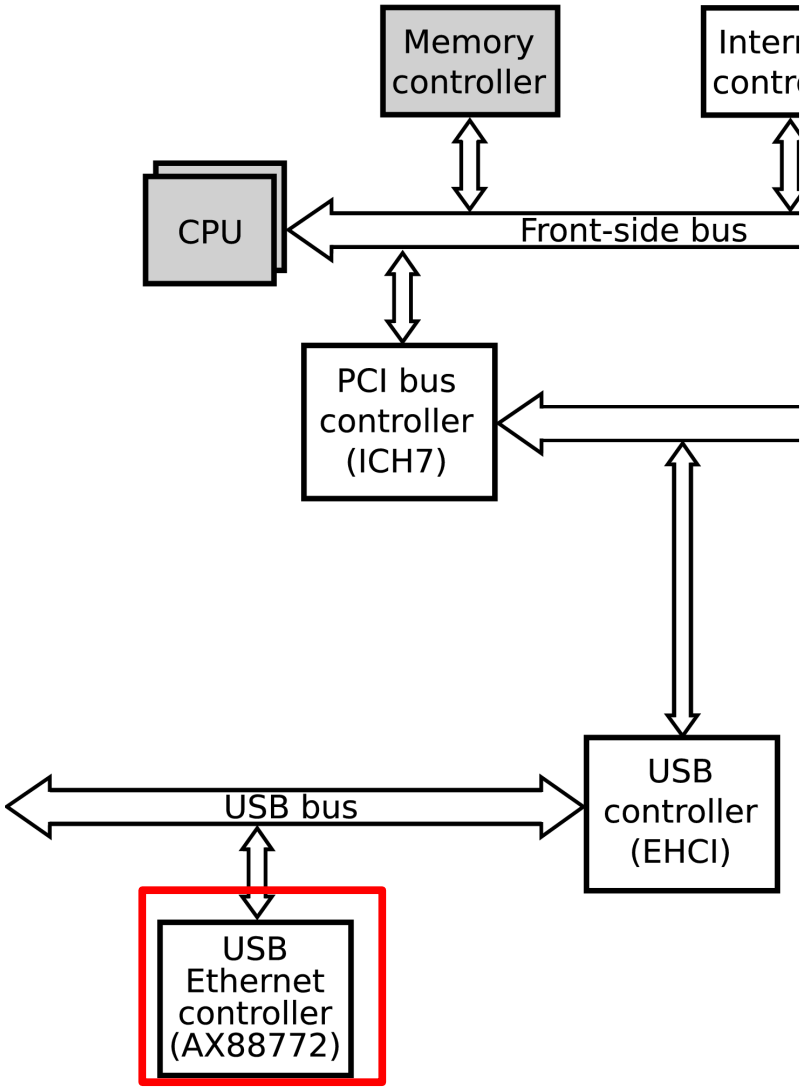

Driver stacking

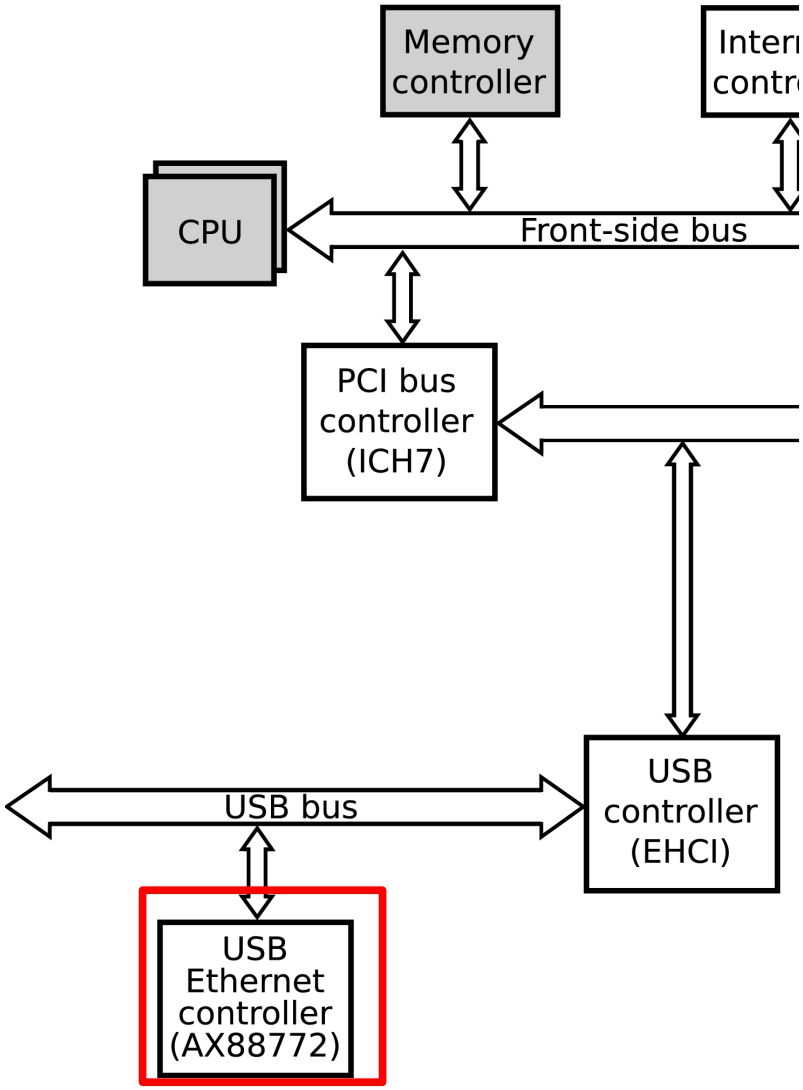

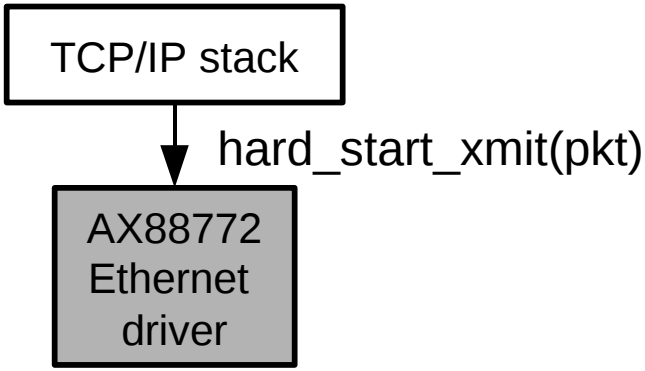

Driver stacking

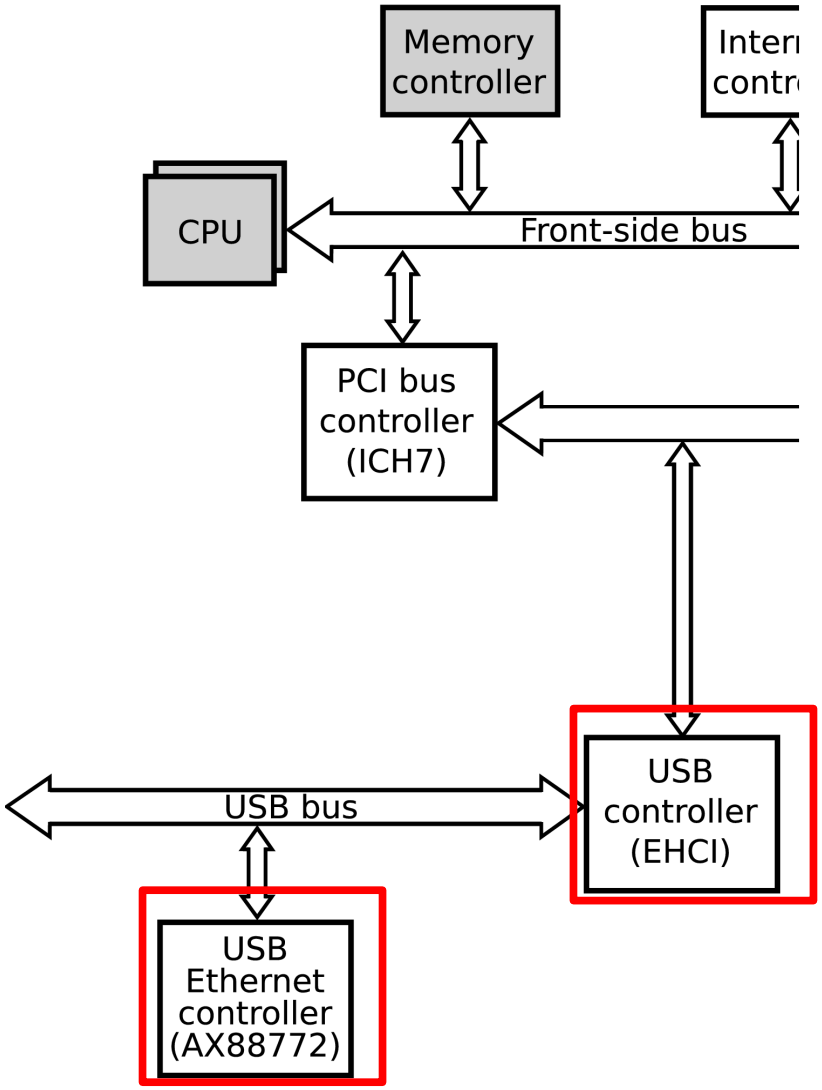

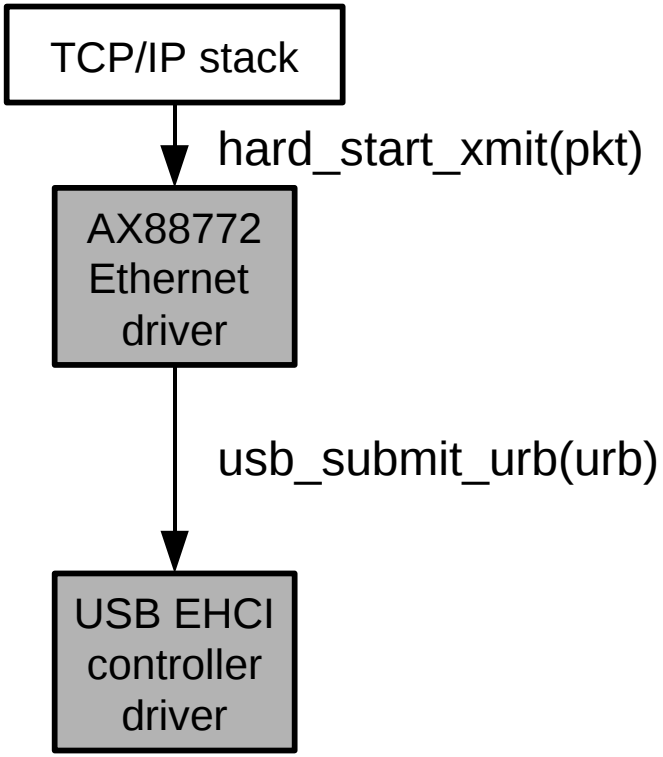

Driver stacking

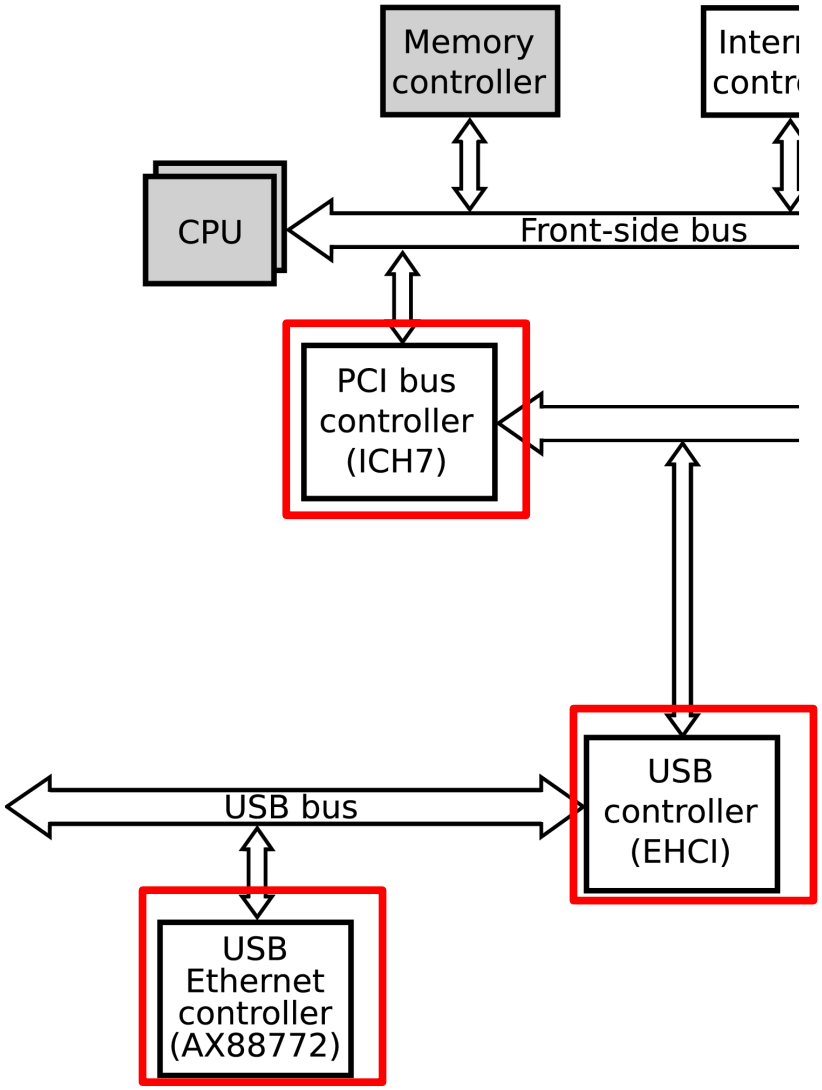

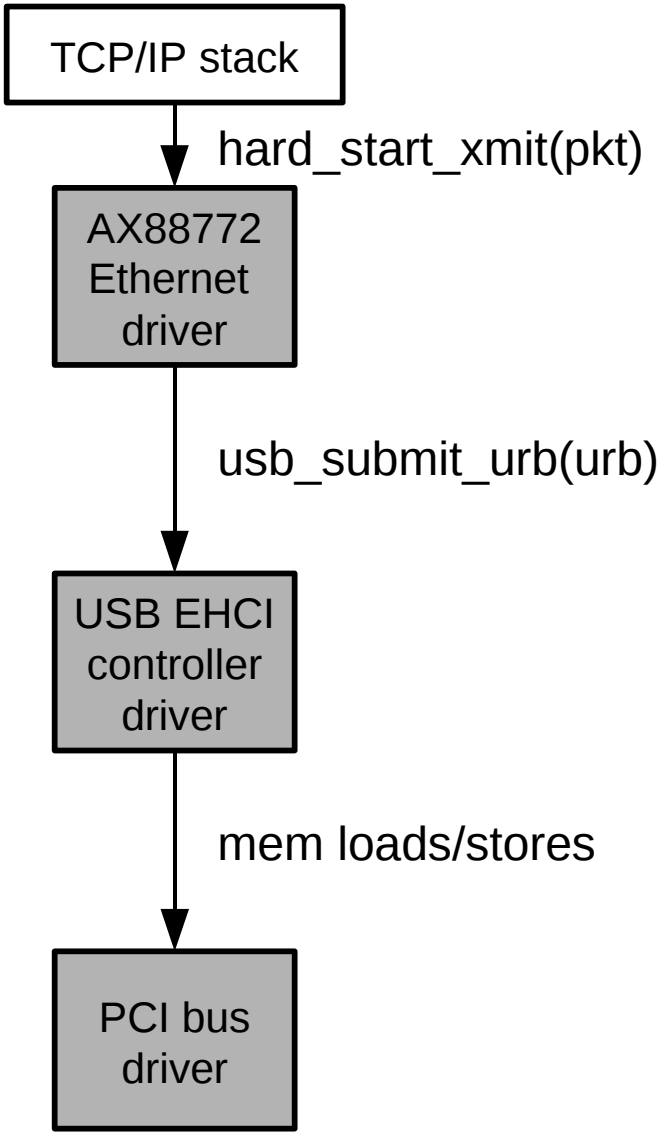

Driver stacking

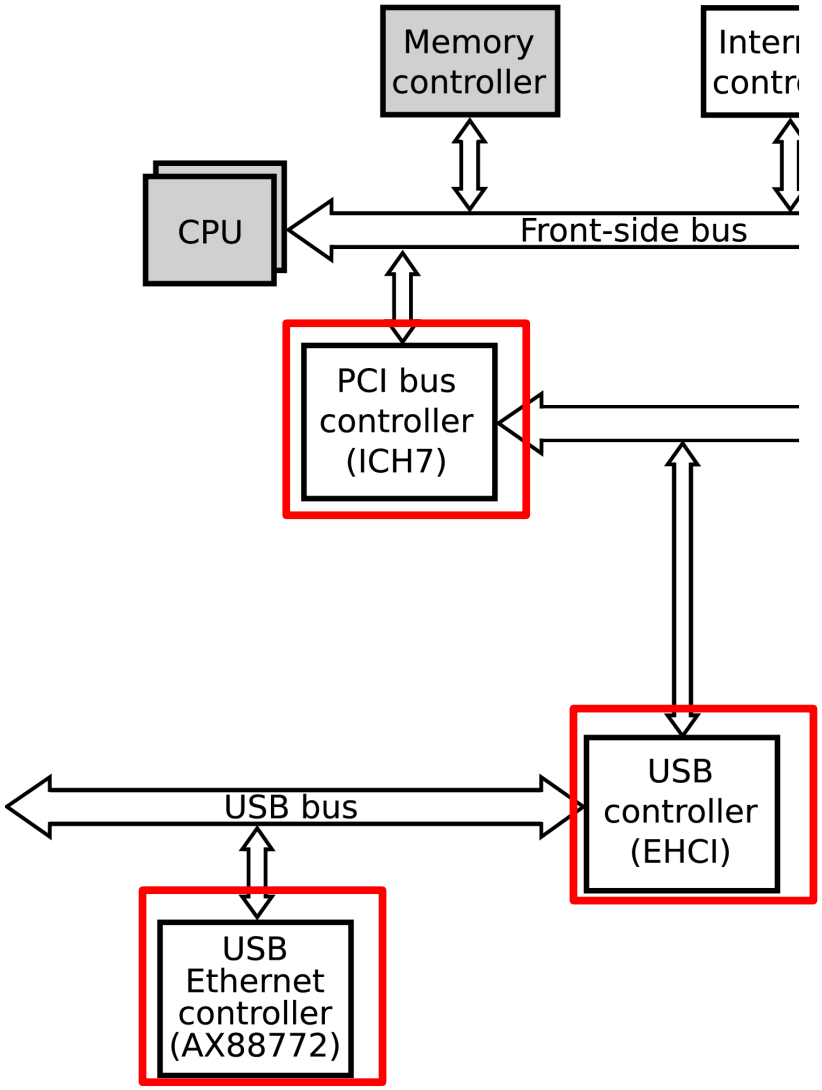

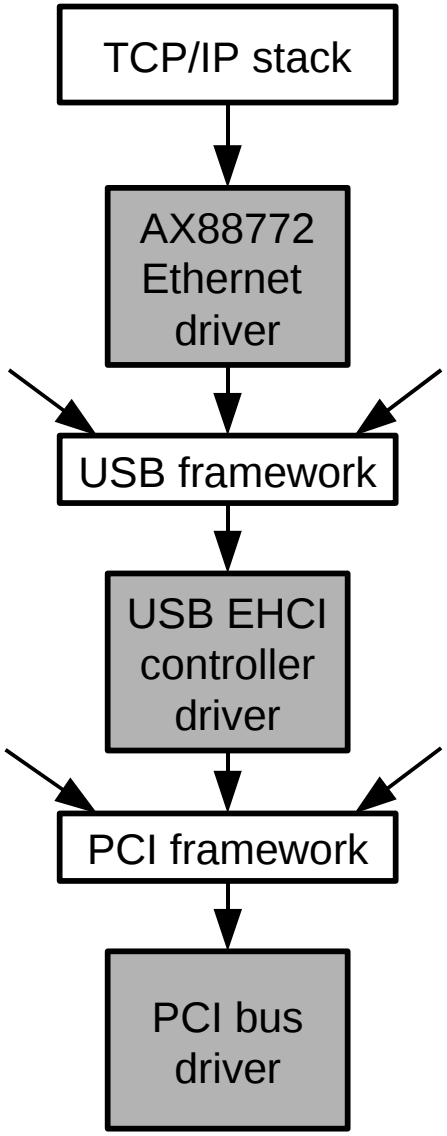

Driver framework design patterns

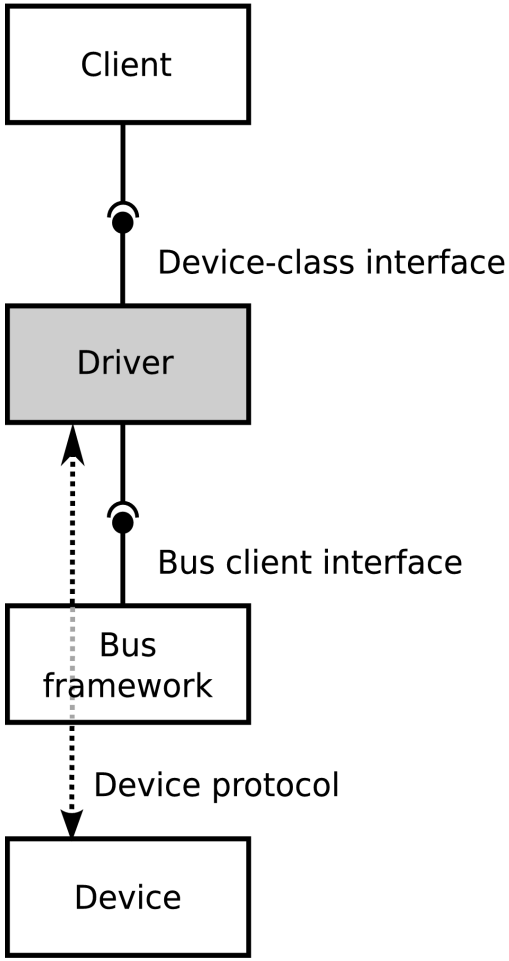

The driver pattern

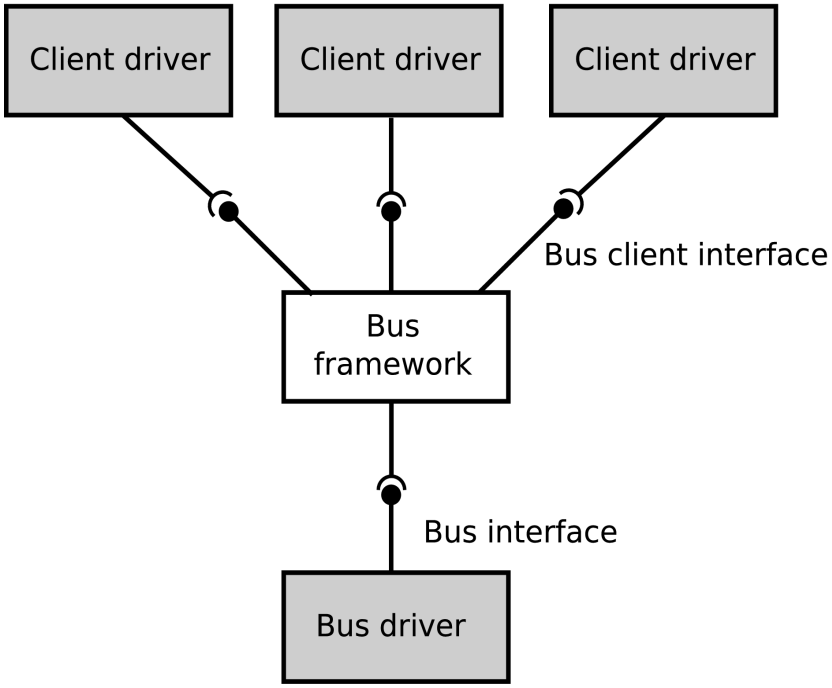

The bus pattern

Driver framework software architecture

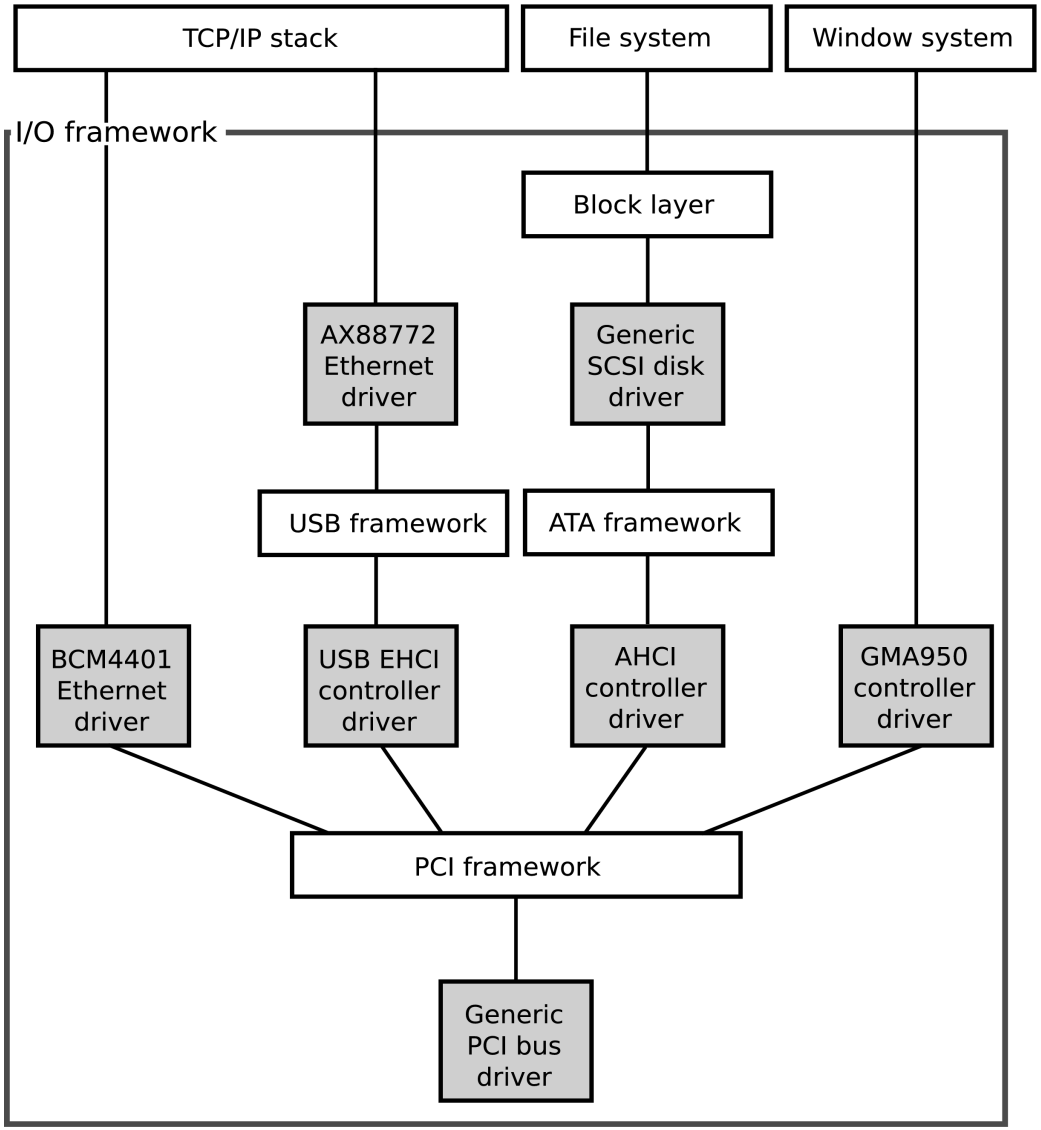

Questions?

Part 2: Overview of research on device driver reliability

Some statistics

NICTA

- 70% of OS code is in device drivers
  - 3,448,000 out of 4,997,000 loc in Linux 2.6.27
- A typical Linux laptop runs ~240,000 lines of kernel code, including ~72,000 loc in 36 different device drivers
- Drivers contain 3—7 times more bugs per loc than the rest of the kernel
- 70% of OS failures are caused by driver bugs

Understanding driver bugs

- Driver failures

Understanding driver bugs

NICTA

- Driver failures
  - Memory access violations
  - OS protocol violations
    - Ordering violations
    - Data format violations
    - Excessive use of resources
    - Temporal failure
  - Device protocol violations
    - Incorrect use of the device state machine
    - Runaway DMA

User-level device drivers

- User-level drivers
  - Each driver is encapsulated inside a separated hardware protection domain
  - Communication between the driver and its client is based on IPC
  - Device memory is mapped into the virtual address space of the driver
  - Interrupts are delivered to the driver via IPC's

User-level drivers in µ-kernel OSs

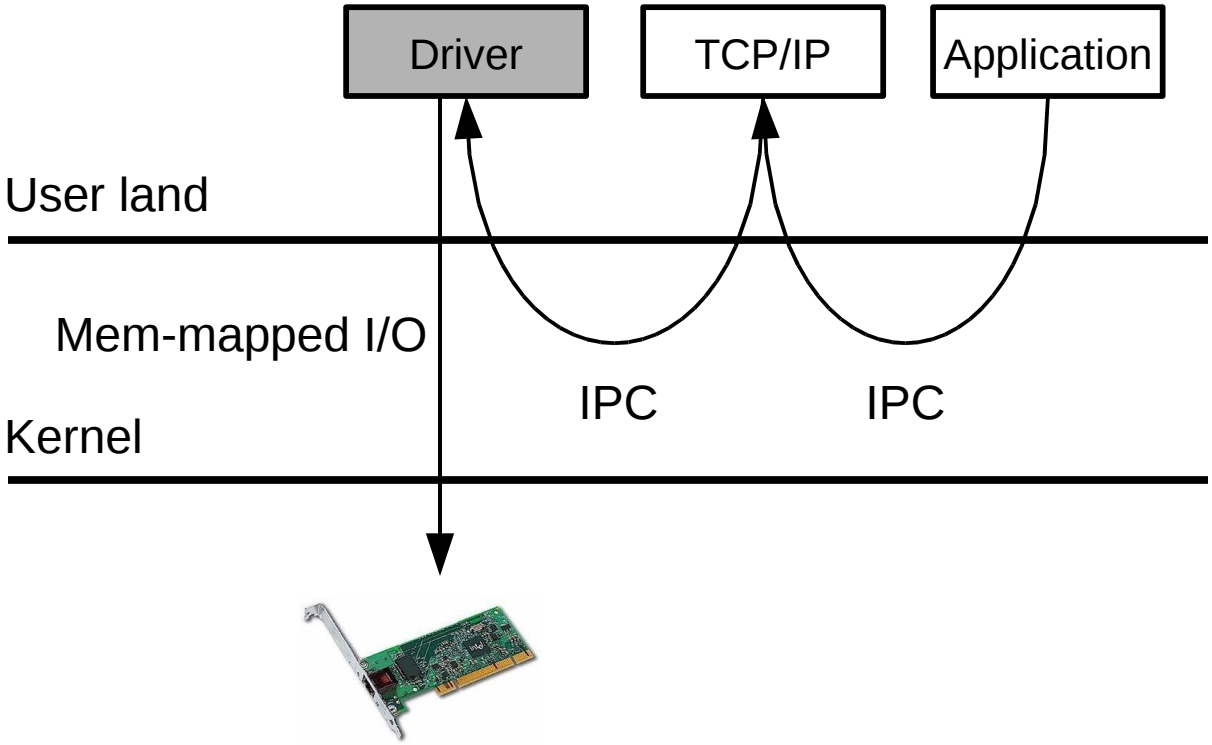

User-level drivers in µ-kernel OSs

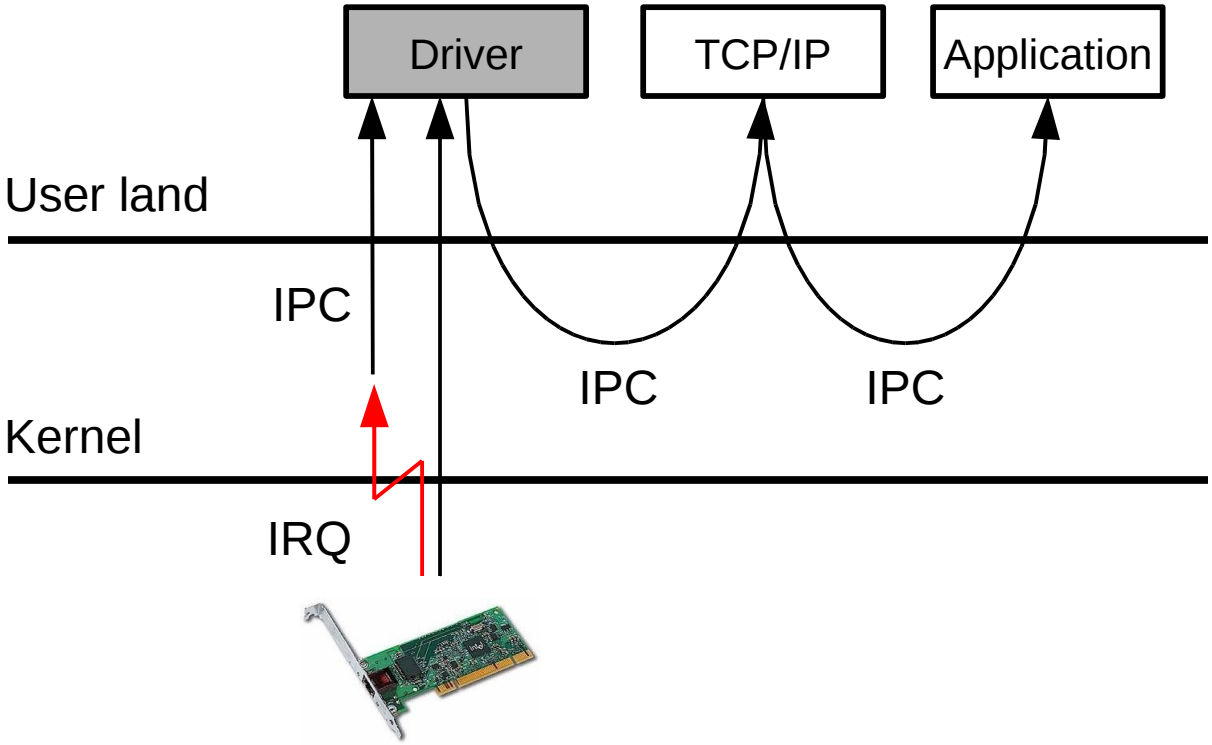

User-level drivers in µ-kernel OSs

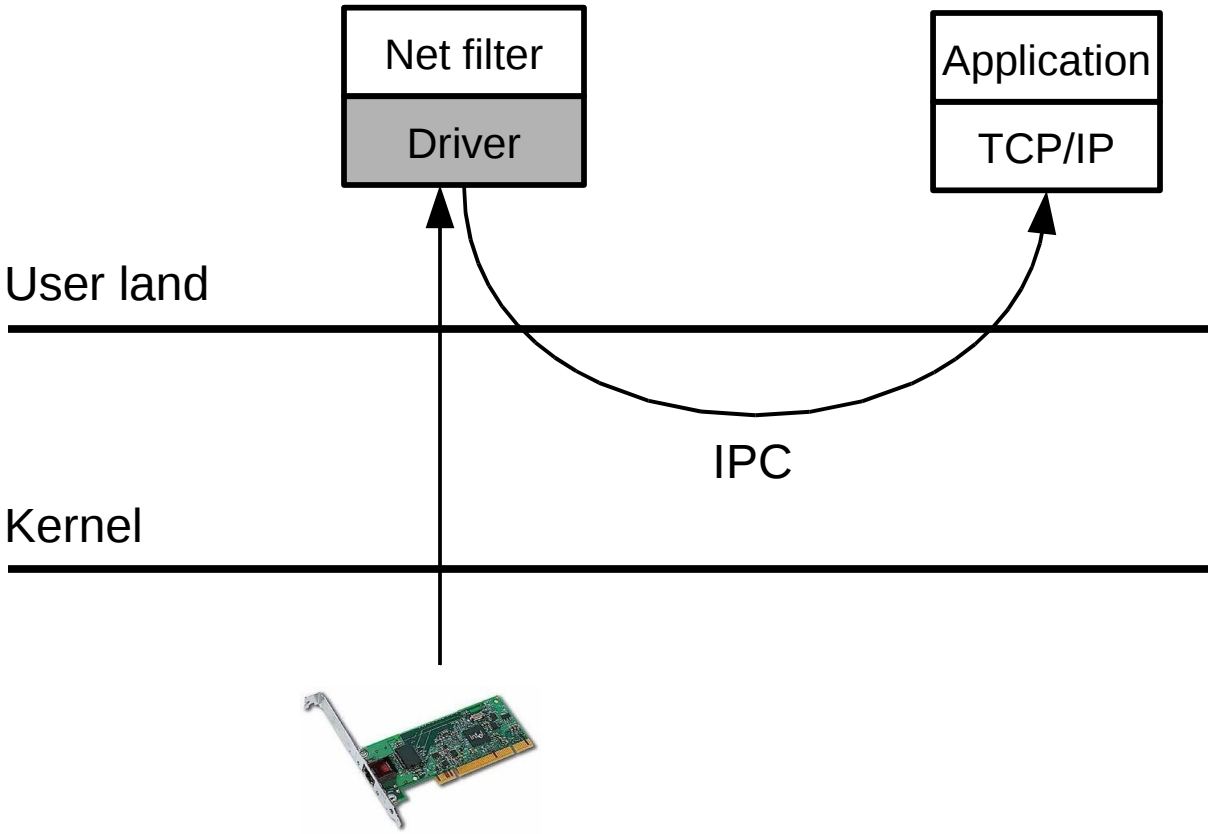

User-level drivers in µ-kernel OSa

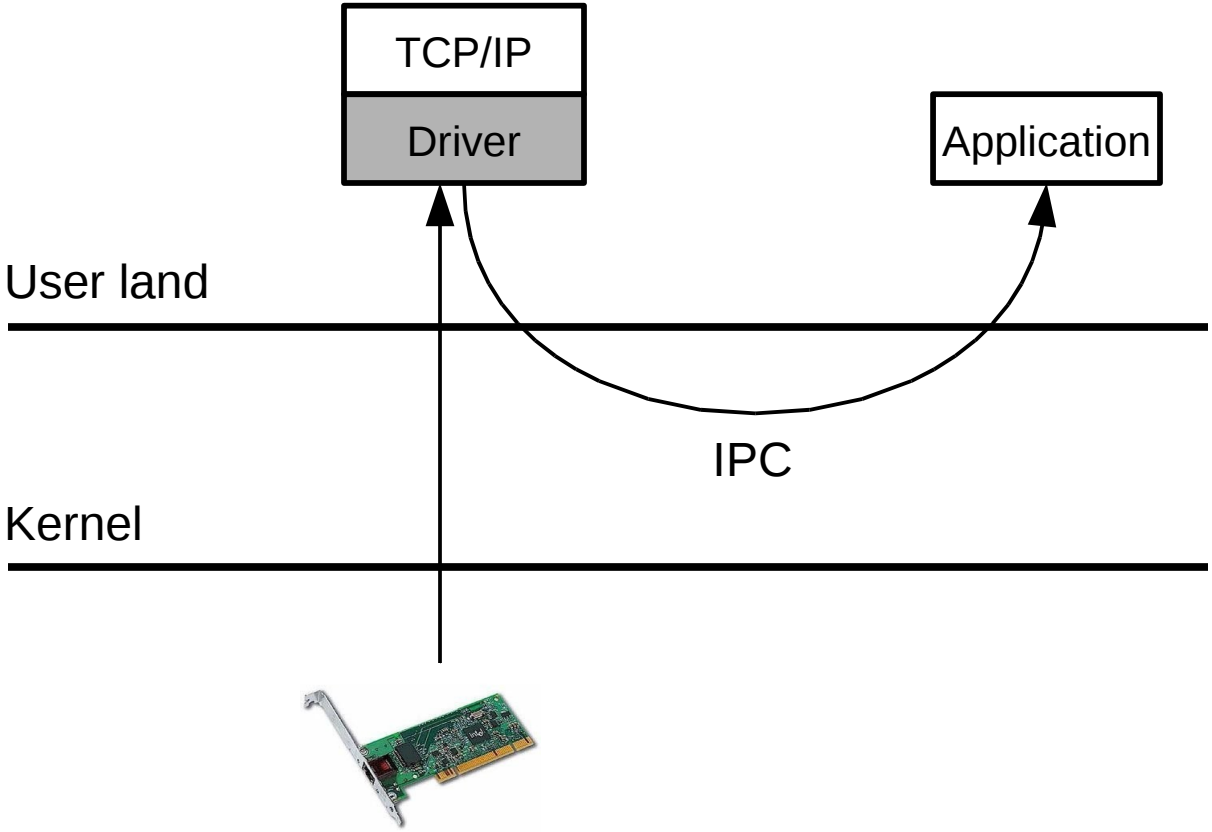

Driver performance characteristics

Driver performance characteristics

- I/O throughput
  - Can the driver saturate the device?
- I/O latency
  - How does the driver affect the latency of a single I/O request?
- CPU utilisation
  - How much CPU overhead does the driver introduce?

Early implementations

- Michigan Terminal System [1970's]
  - OS for IBM System/360
  - Apparently, the first to support user-level drivers
- Mach [1985-1994]
  - Distributed multi-personality µ-kernel-based multi-server OS
  - High IPC overhead
  - Eventually, moved drivers back into the kernel
- L3 [1987-1993]
  - Persistent µ-kernel-based OS
  - High IPC overhead
  - Improved IPC design: 20-fold performance improvement
  - No data on driver performance available

More recent implementations

- Sawmill [~2000]
  - Multiserver OS based on automatic refactoring of the Linux kernel
  - Hampered by software engineering problems
  - No data on driver performance available
- DROPS [1998]
  - L4 Fiasco-based real-time OS
  - ~100% CPU overhead due to user-level drivers
- Fluke [1996]
  - ~100% CPU overhead
- Mungi [1993—2006]
  - Single-address-space distributed L4-based OS
  - Low-overhead user-level I/O demonstrated for a disk driver

Currently active systems

- Research
  - seL4
  - MINIX3
  - Nexus
- Commercial
  - OKL4
  - QNX
  - GreenHills INTEGRITY

Improving the performance of ULD

Improving the performance of ULD

- Ways to improve user-level driver performance
  - Shared-memory communication
  - Request queueing
  - Interrupt coalescing

Implementing efficient shared-memory communication

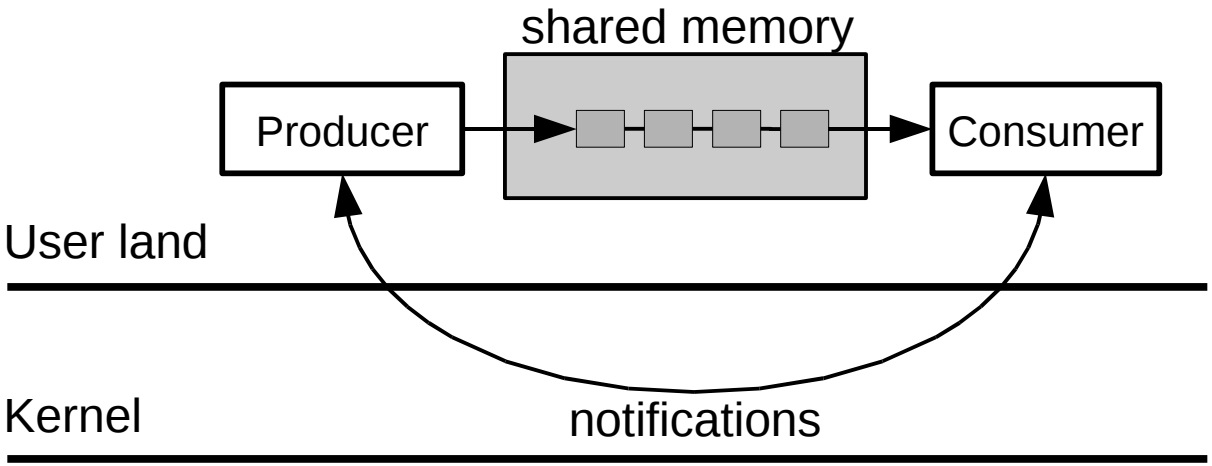

- Issues:
  - Resource accounting
  - Safety
  - Asynchronous notifications

Rbufs

- Proposed in the Nemesis microkernel-based multimedia OS

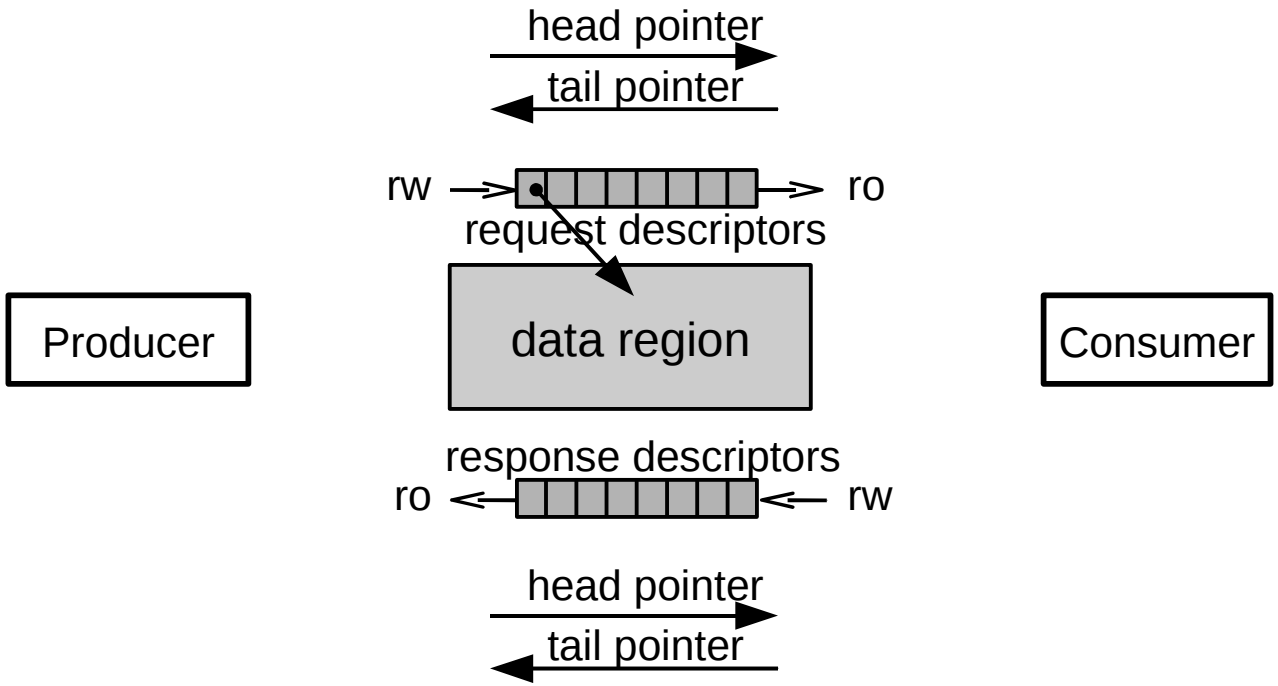

User-level drivers in a monolithic OS

Ben Leslie et al. User-level device drivers: Achieved performance, 2005

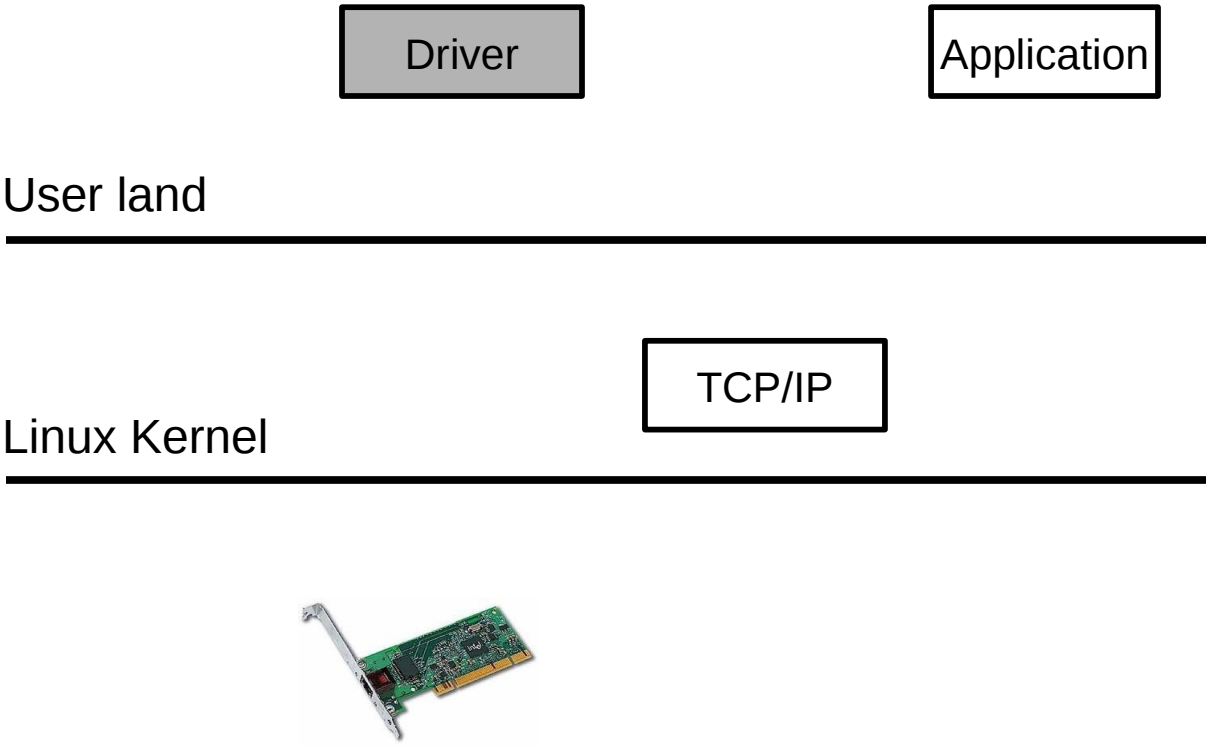

User-level drivers in a monolithic OS

Ben Leslie et al. User-level device drivers: Achieved performance, 2005

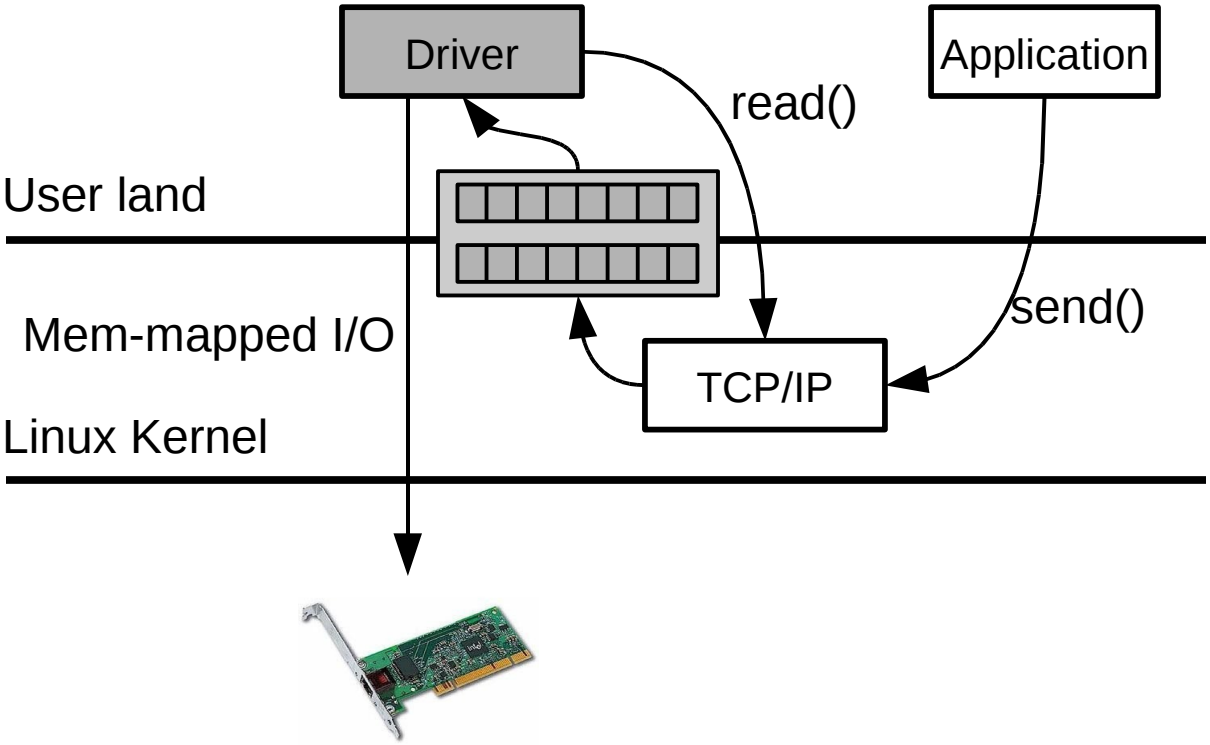

User-level drivers in a monolithic OS

Ben Leslie et al. User-level device drivers: Achieved performance, 2005

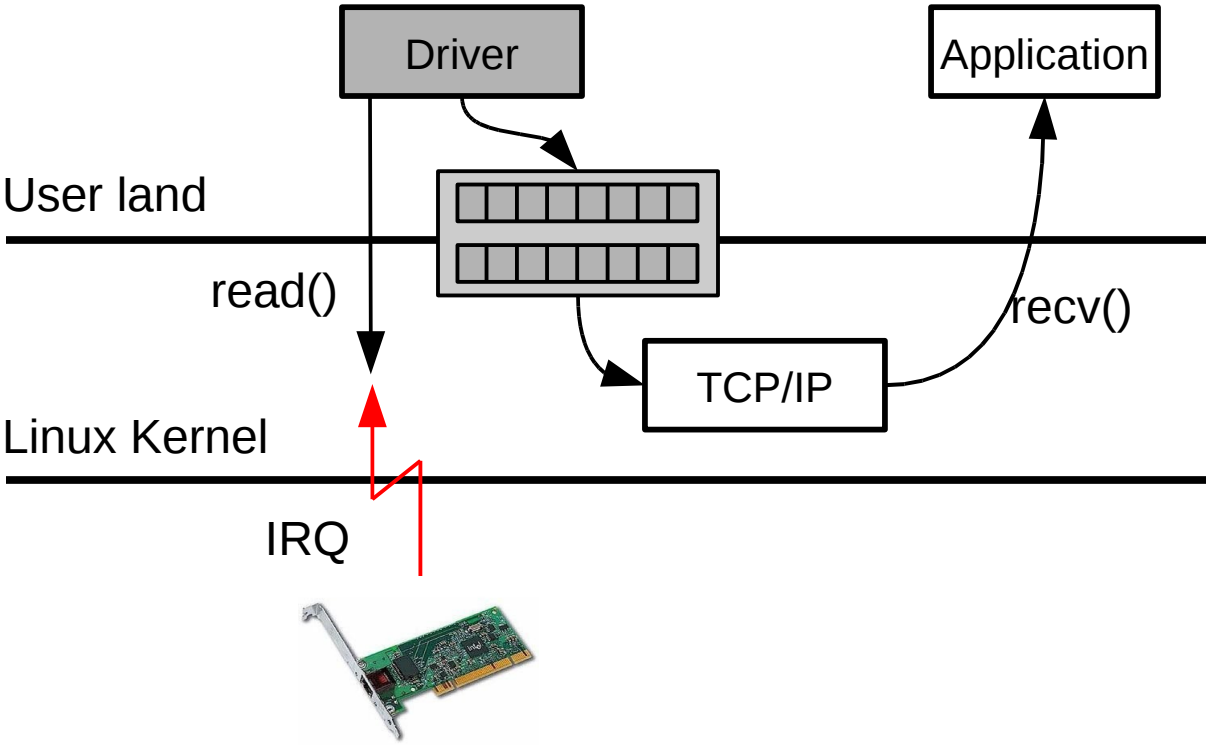

User-level drivers in a monolithic OS

Ben Leslie et al. User-level device drivers: Achieved performance, 2005

- Performance
  - Up to 7% throughput degradation
  - Up to 17% CPU overhead
  - Aggressive use of interrupt rate limiting potentially affects latency (not measured).

Nooks

- A complete device-driver reliability solution for Linux:
  - Fault isolation
  - Fault detection
  - Recovery

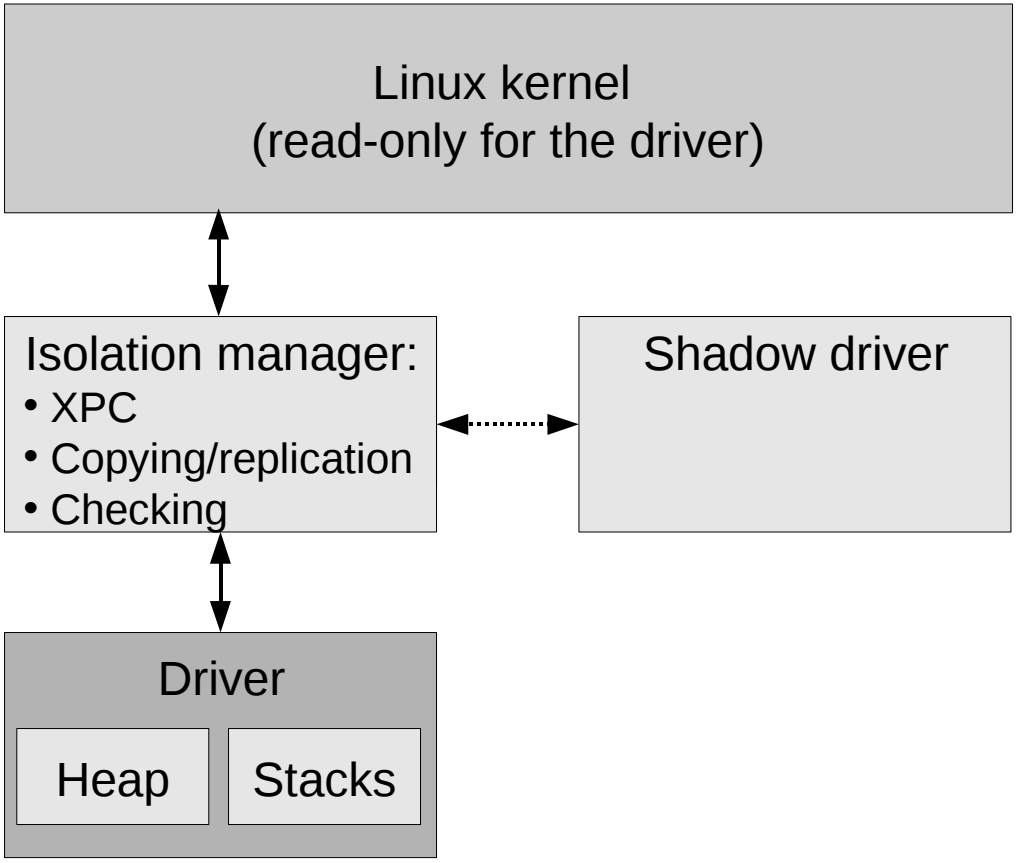

Nooks

- A complete device-driver reliability solution for Linux:
  - Fault isolation
  - Fault detection
  - Recovery

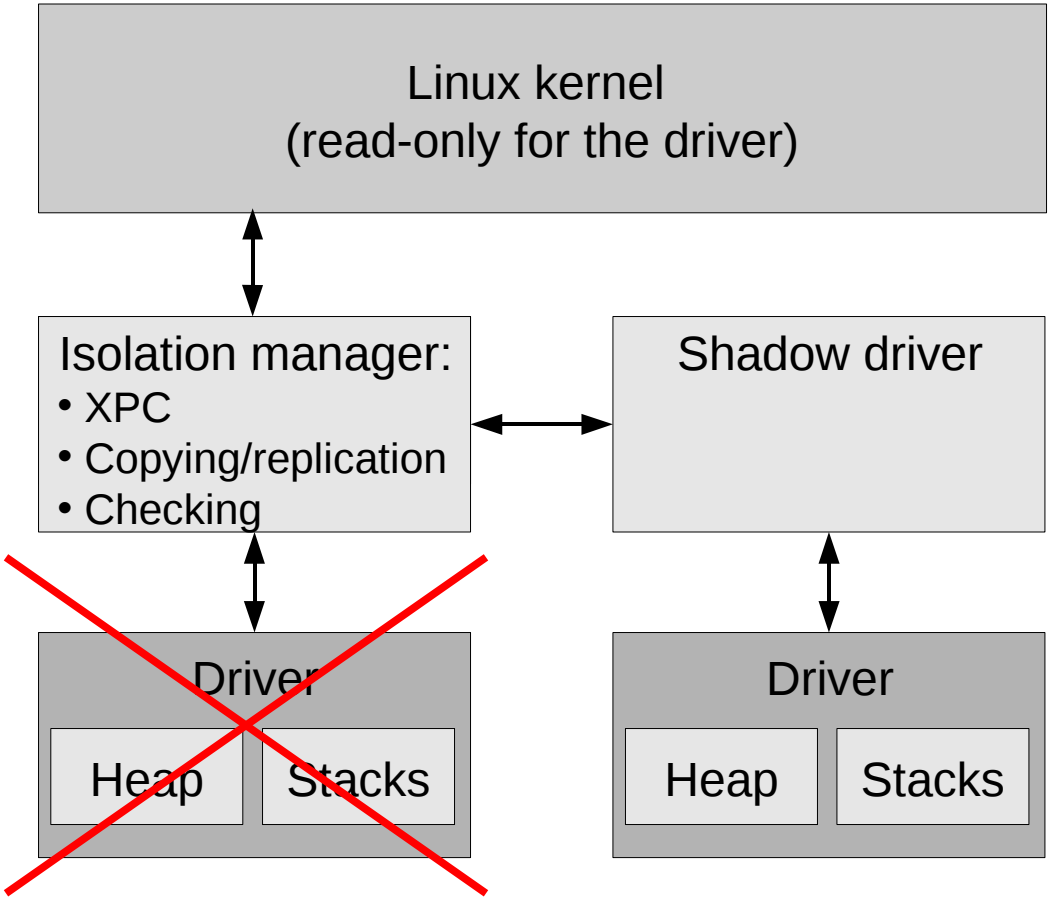

Nooks

- A complete device-driver reliability solution for Linux:
  - Fault isolation
  - Fault detection
  - Recovery

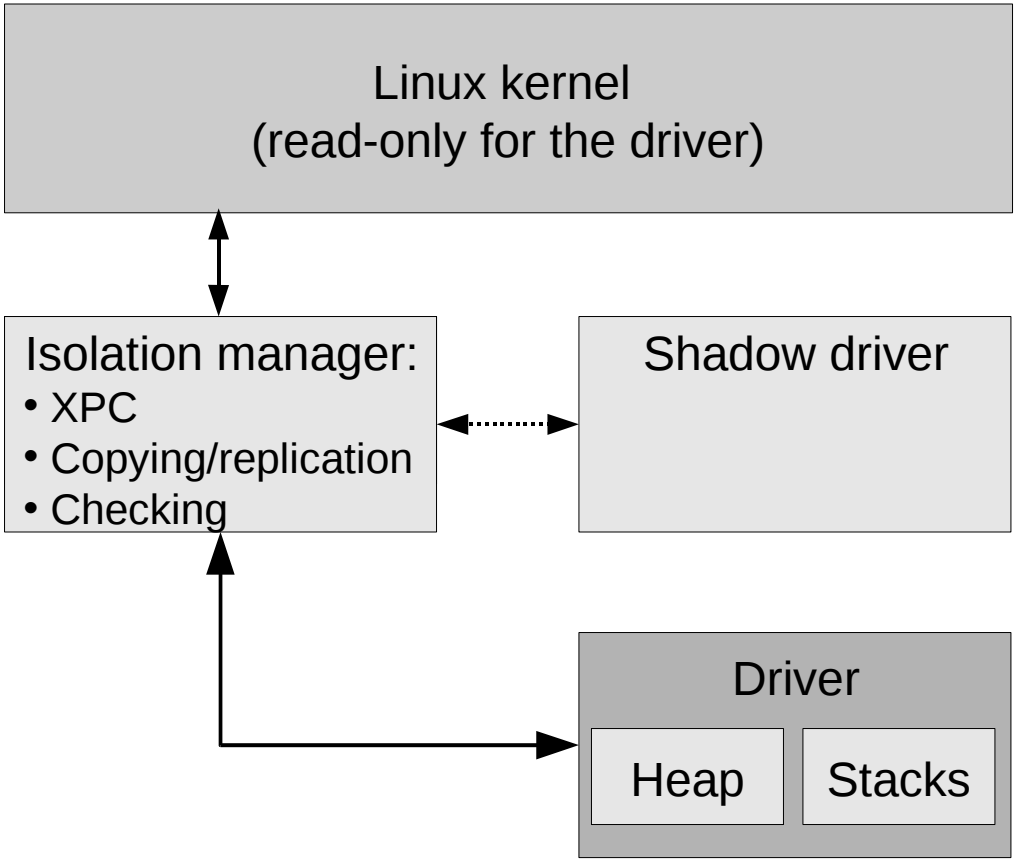

Nooks

- A complete device-driver reliability solution for Linux:
  - Fault isolation
  - Fault detection
  - Recovery
- Problems
  - The driver interface in Linux is not well defined. Nooks must simulate the behaviour of hundreds of kernel and driver entry points.
- Performance
  - 10% throughput degradation
  - 80% CPU overhead

Virtualisation and user-level drivers

- Direct I/O

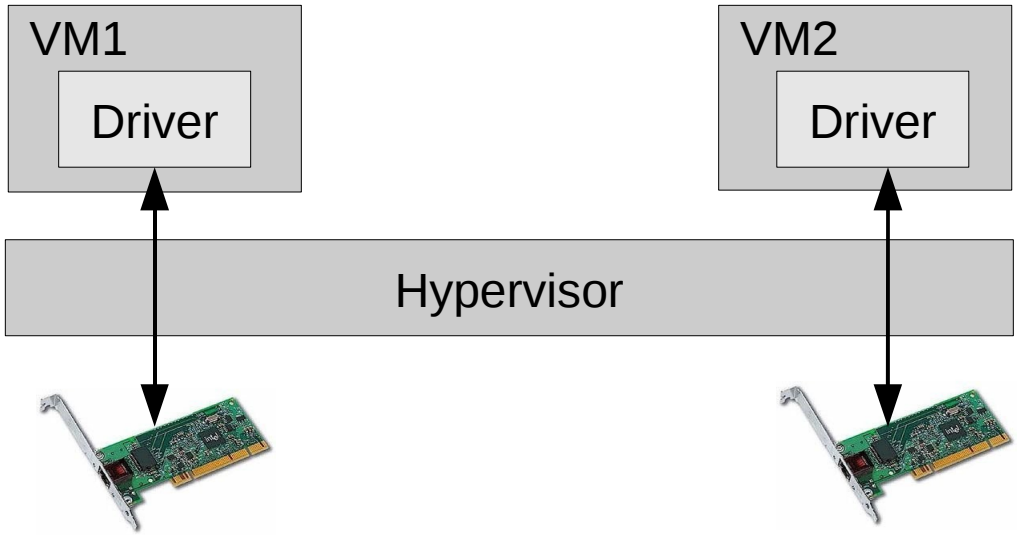

Virtualisation and user-level drivers

- Paravirtualised I/O

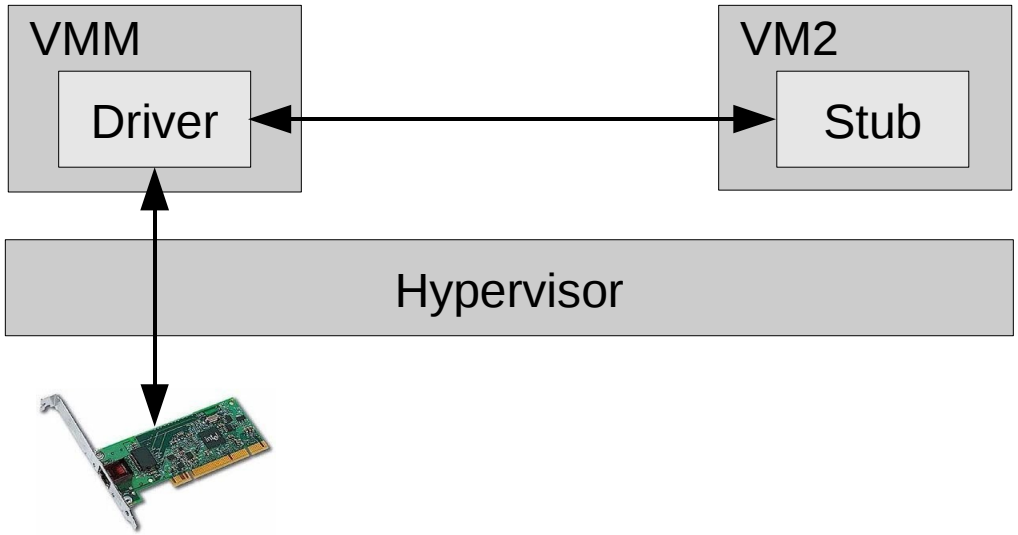

Paravirtualised I/O in Xen

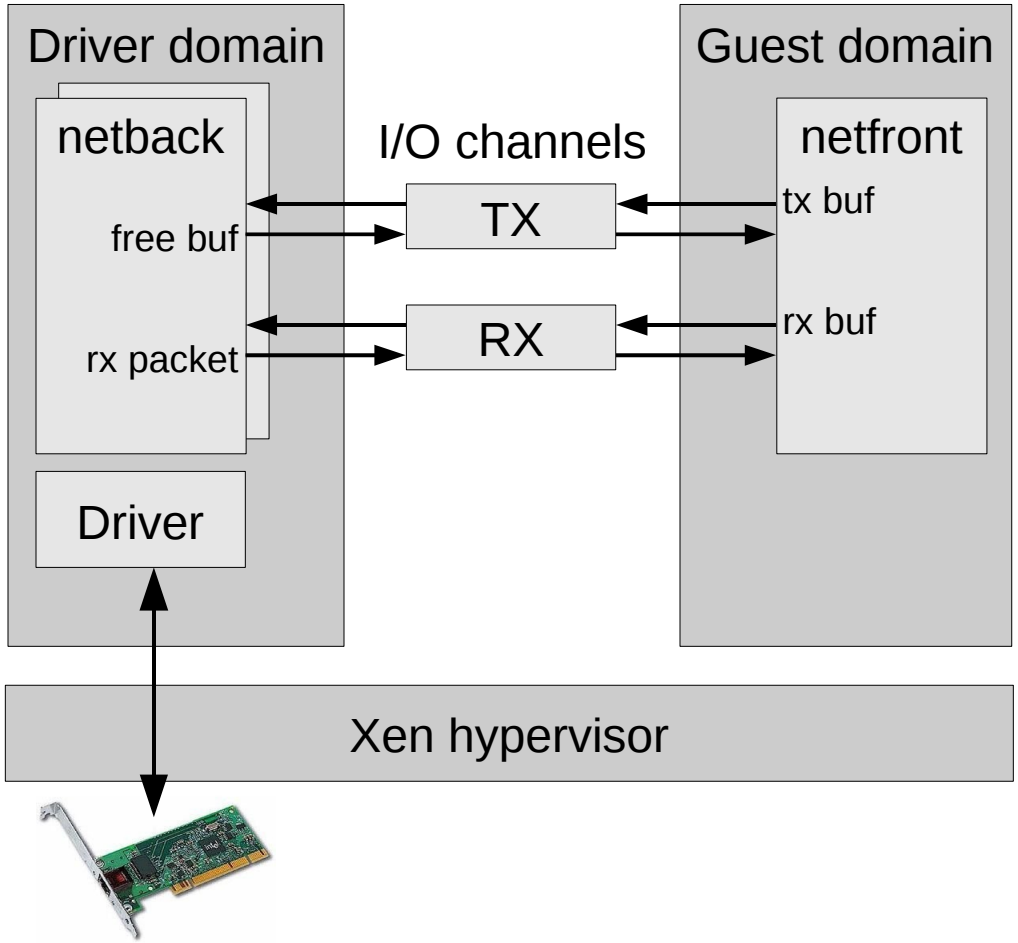

- Xen I/O channels are similar to rbufs, but use a single circular buffer for both requests and completions and rely on mapping rather than sharing

Xen I/O channels

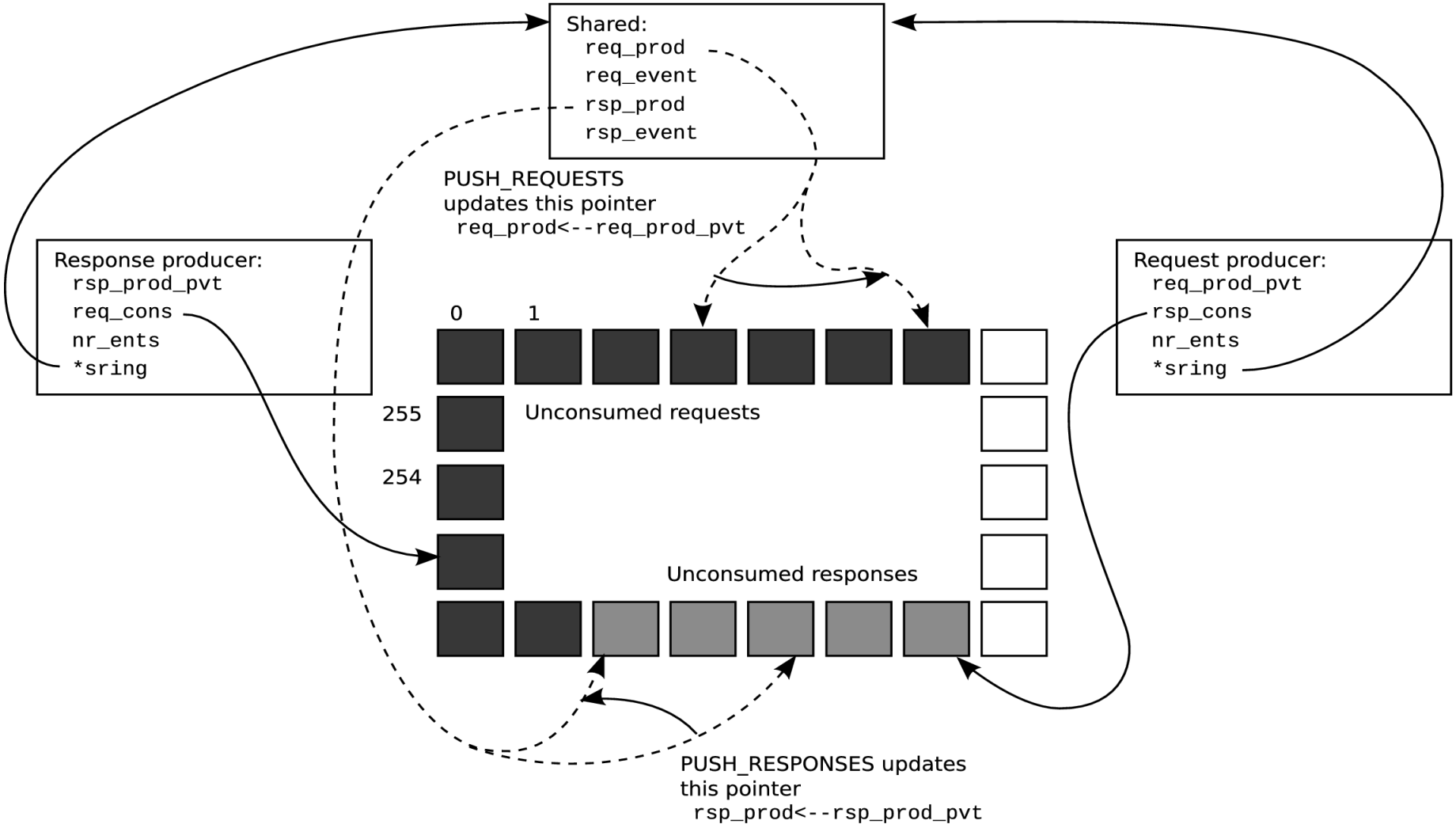

Paravirtualised I/O in Xen

NICTA

- Performance overhead of the original implementation: 300%
  - Longer critical path (increased instructions per packet)
  - Higher TLB and cache miss rates (more cycles per instructions)
  - Overhead of mapping
- Optimisations
  - Avoid mapping on the send path (the driver does not need to “see” the packet content)
  - Replace mapping with copying on the receive path
  - Avoid unaligned copies
  - Optimised implementation of page mapping
  - CPU overhead down to 97% (worst-case receive path)

Other driver reliability techniques

- Implementing drivers using safe languages
  - Java OSs: KaffeOS, JX
    - Every process runs in a separate protection domain with a private heap. Process boundaries are enforced by the language runtime. Communication is based on shared heaps.
  - House (Haskell OS)
    - Bare-metal Haskell runtime. The kernel and drivers are in Haskell.
    - User programs can be written in any language.
  - SafeDrive
    - Extends C with pointer type annotations enforced via static and runtime checking
    - `unsigned n;`

      `struct e1000 buffer * count(n) bufinfo;`

Other driver reliability techniques

- Implementing drivers using safe languages
  - Singularity OS
    - The entire OS is implemented in Sing#
    - Every driver is encapsulated in a separate software-isolated process
    - Processes communicated via messages sent across channels
    - Sing# provides means to specify and statically enforce channel protocols

Other driver reliability techniques

NICTA

- Static analysis
  - SLAM, Blast, Coverity
  - Generic programming faults
    - Release acquired locks; do not acquire a lock twice
    - Do not dereference user pointers
    - Check potentially NULL-pointers returned from routine
  - Driver-specific properties
    - “if a driver calls another driver that is lower in the stack, then the dispatch routine returns the same status that was returned by the lower driver”
    - “drivers mark I/O request packets as pending while queuing them”
  - Limitations
    - Many properties are beyond reach of current tools or are theoretically undecidable (e.g., memory safety)

Questions?

Part 3: Device drivers research at ERTOS

User-level device drivers

- What is the overhead of user-level I/O in a microkernel-based OS?
  - Still an open question
  - Indirect evidence suggest that the overhead can be reduced to ~10%
- Project: design, implement and evaluate a user-level driver framework for a modern microkernel (seL4 or OKL4)

Dingo: Taming Device Drivers

Leonid Ryzhyk Peter Chubb Ihor Kuz Gernot Heiser

UNSW, NICTA, Open Kernel Labs

Australian Government
Department of Broadband, Communications and the Digital Economy
Australian Research Council

NICTA Members
NICTA Partners

The Dingo approach

NICTA

Can we develop drivers that contain fewer bugs in the first place?

Localise complexity in driver development

- Many driver bugs are provoked by the complexity of the OS interface

Reduce bugs by improving the design of this interface

Dingo for Linux

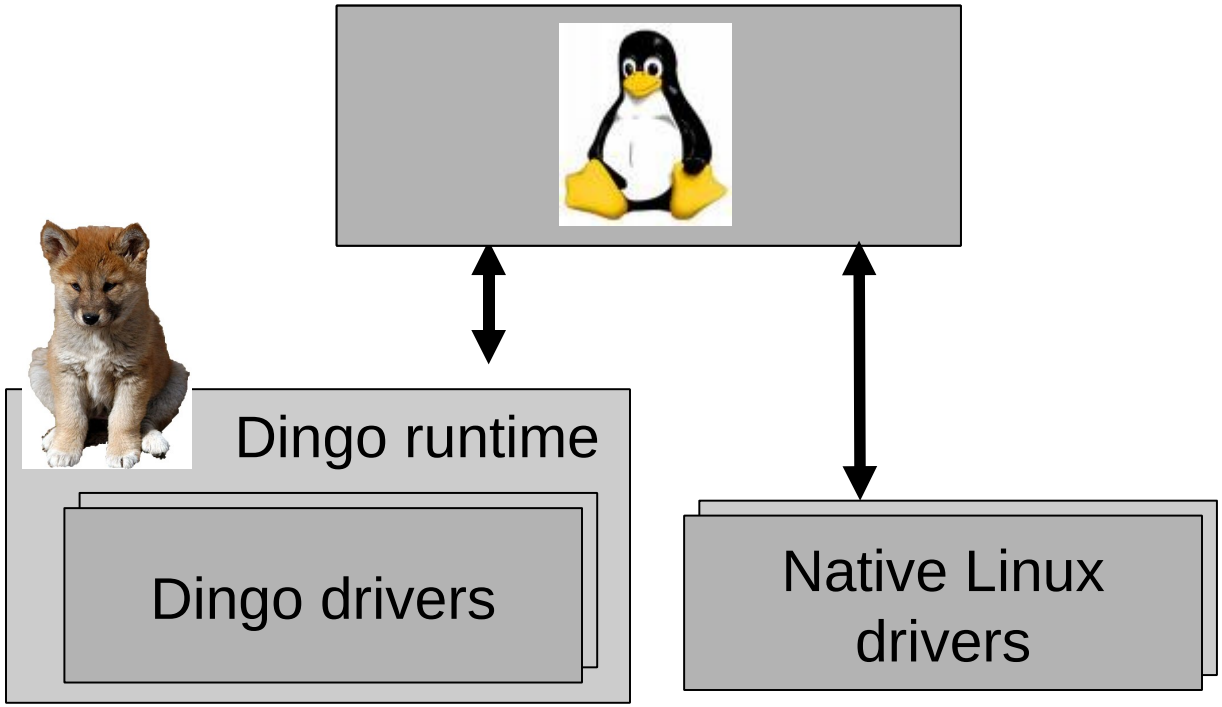

A study of driver bugs

Driver defects

- Types of driver defects
  - Device protocol violations
  - OS protocol violations
  - Concurrency defects
  - Generic programming defects

A study of Linux driver bugs

Driver	#loc	#bugs
USB		
RTL8150 USB-to-Ethernet adapter	827	16
EL1210a USB-to-Ethernet adapter	710	2
KL5kusb101 USB-to-Ethernet apapter	925	15
Generic USB network driver	1028	45
USB hub	2234	67
USB-to-serial converter	989	50
USB mass storage	803	23
Firewire		
IEEE1394 Ethernet controller	1413	22
SBP-2 transport protocol	1713	46
PCI		
Mellanox InfiniHost InfiniBand adapter	11718	123
BNX2 Ethernet adapter	5412	51
i810 frame buffer	2920	16
CMI8338 audio	2660	22
		498

A study of Linux driver bugs

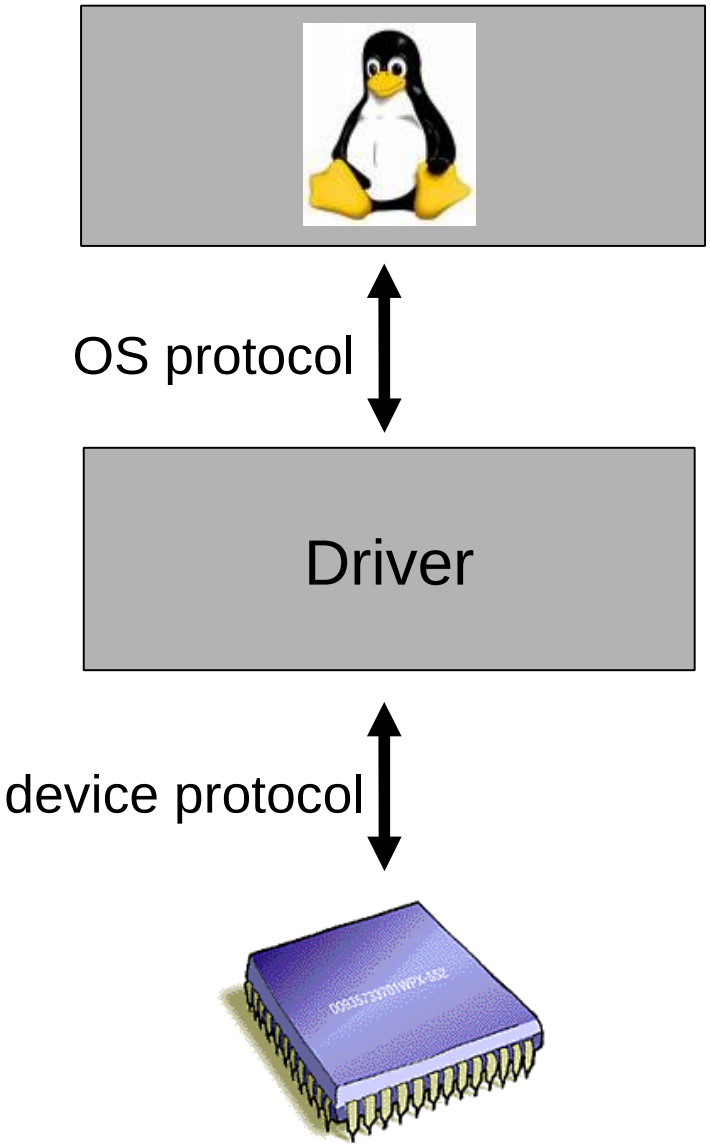

A study of Linux driver bugs

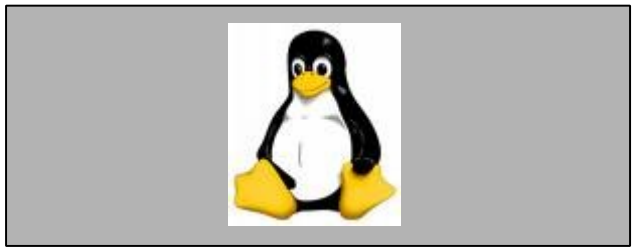

OS protocol

Driver

device protocol

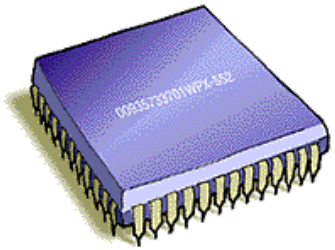

Device protocol violation examples:

- Issuing a command to uninitialised device
- Writing an invalid register value
- Incorrectly managing DMA descriptors

Device protocol violations

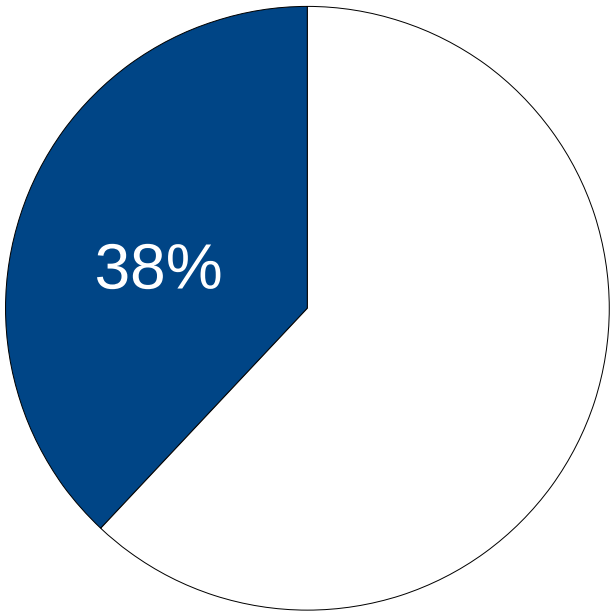

Device protocol violations

OS protocol violations

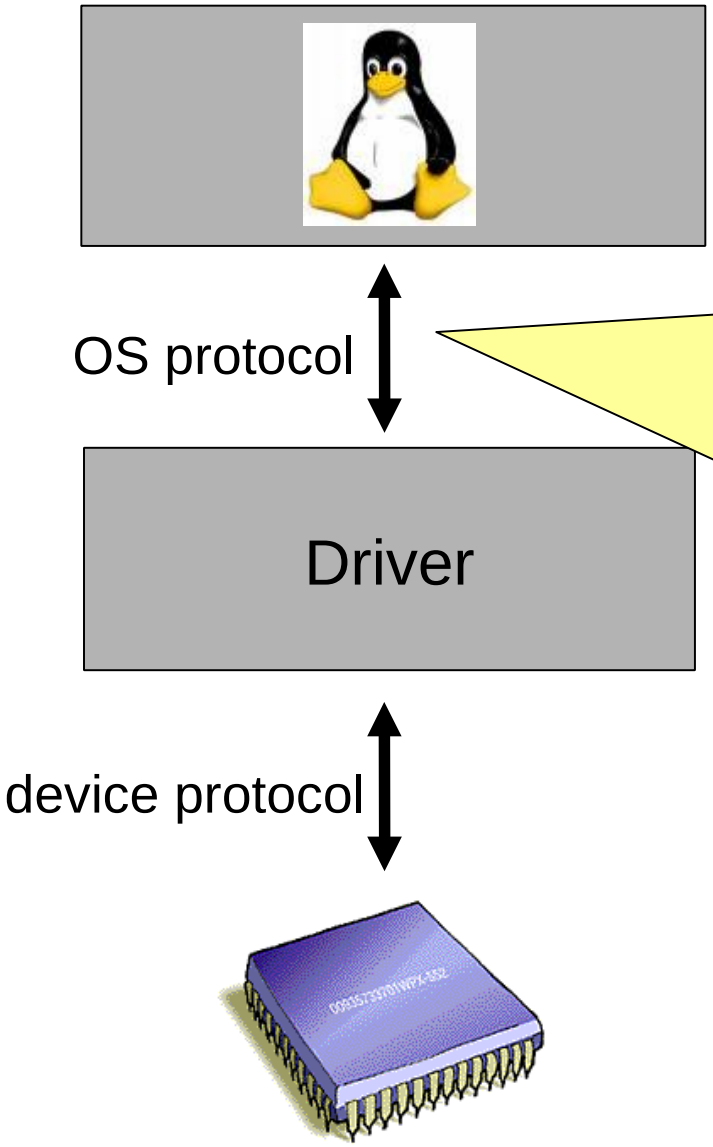

Mellanox Infinihost controller driver

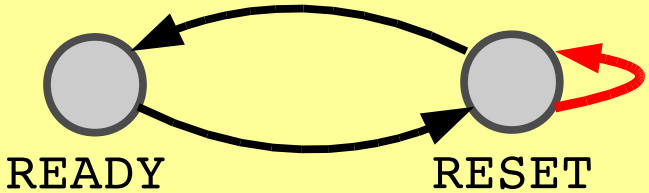


```
if(cur_state==IB_RESET &&
   new_state==IB_RESET){
  return 0;
}
```

OS protocol violations

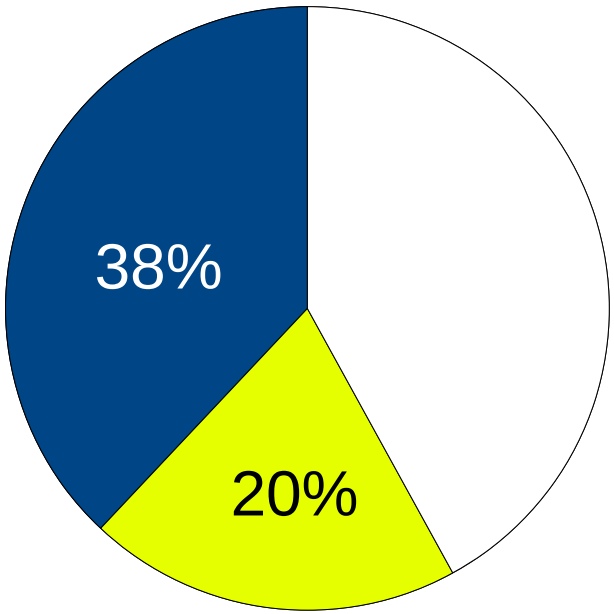

Device protocol violations

OS protocol violations

Concurrency errors

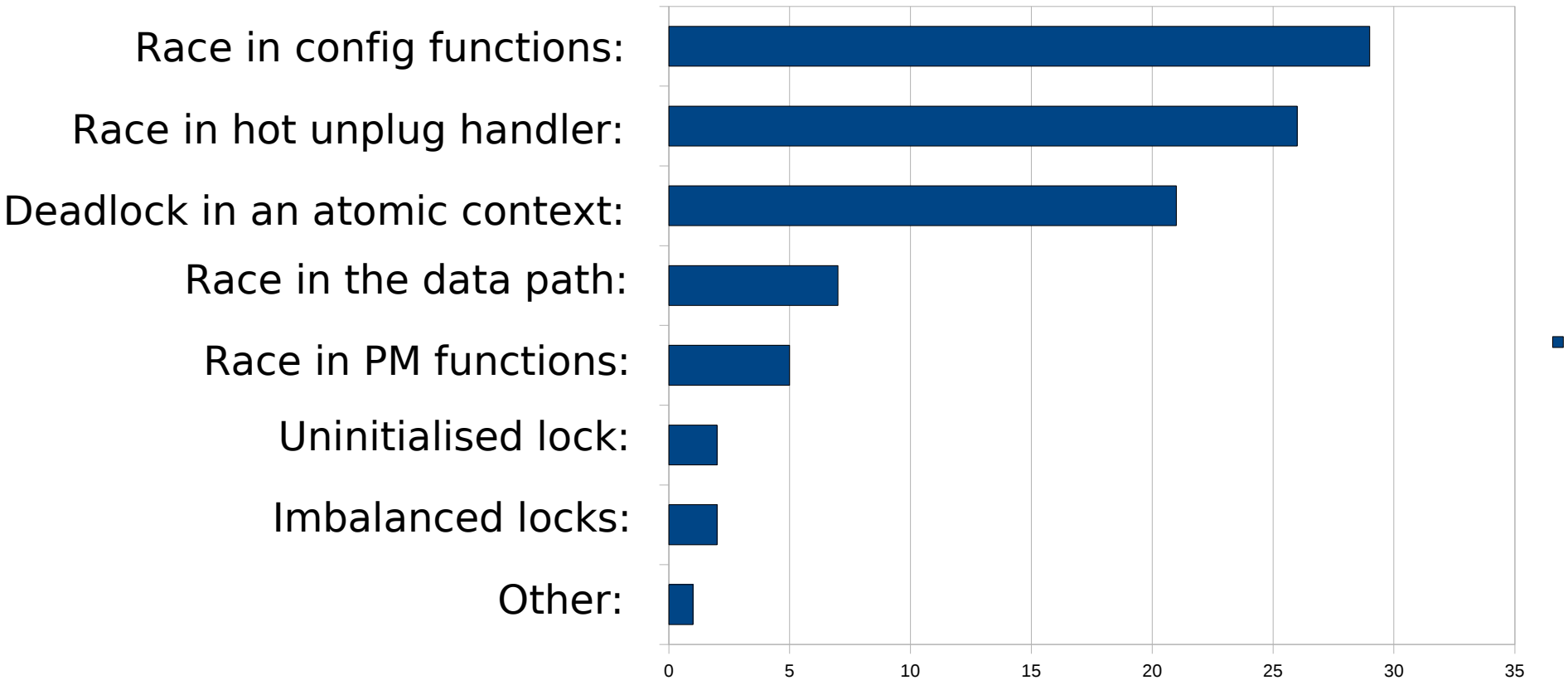

Concurrency errors

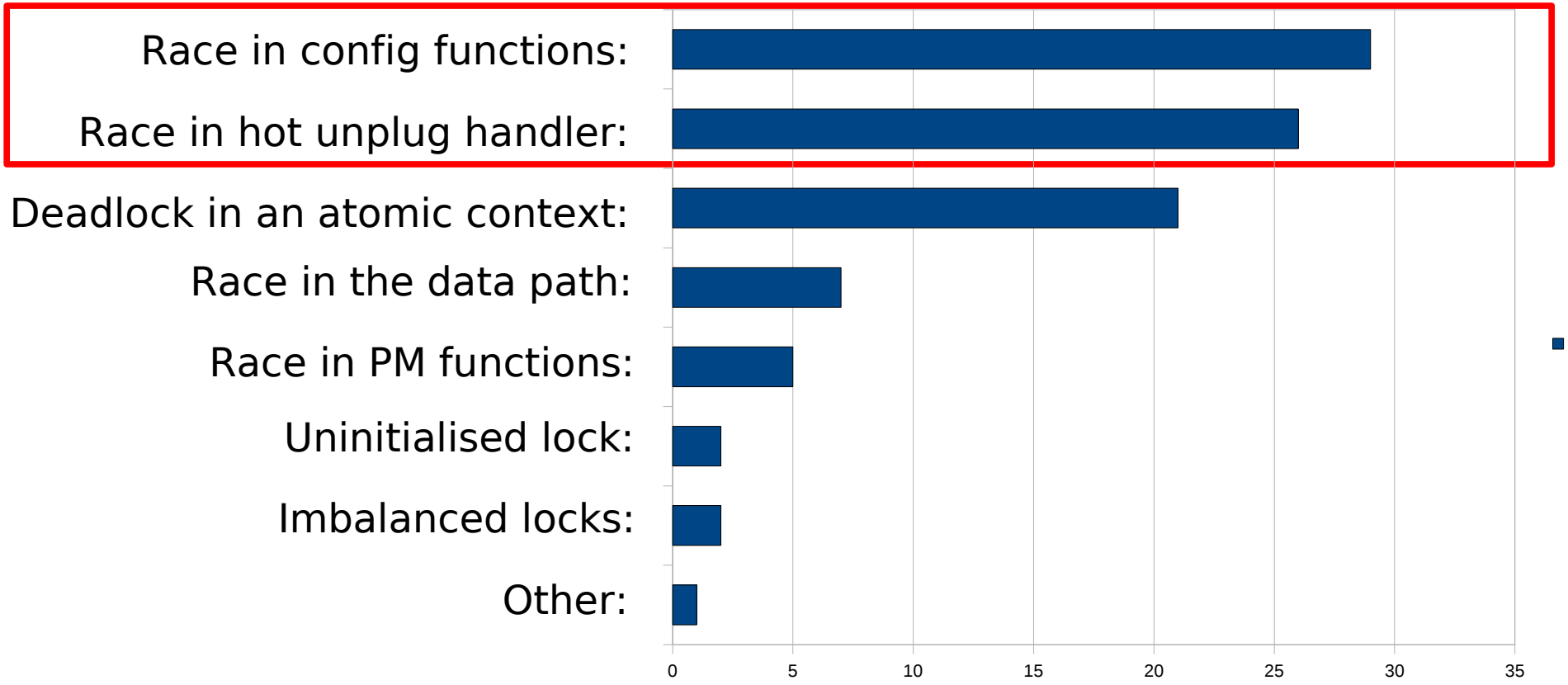

Concurrency errors

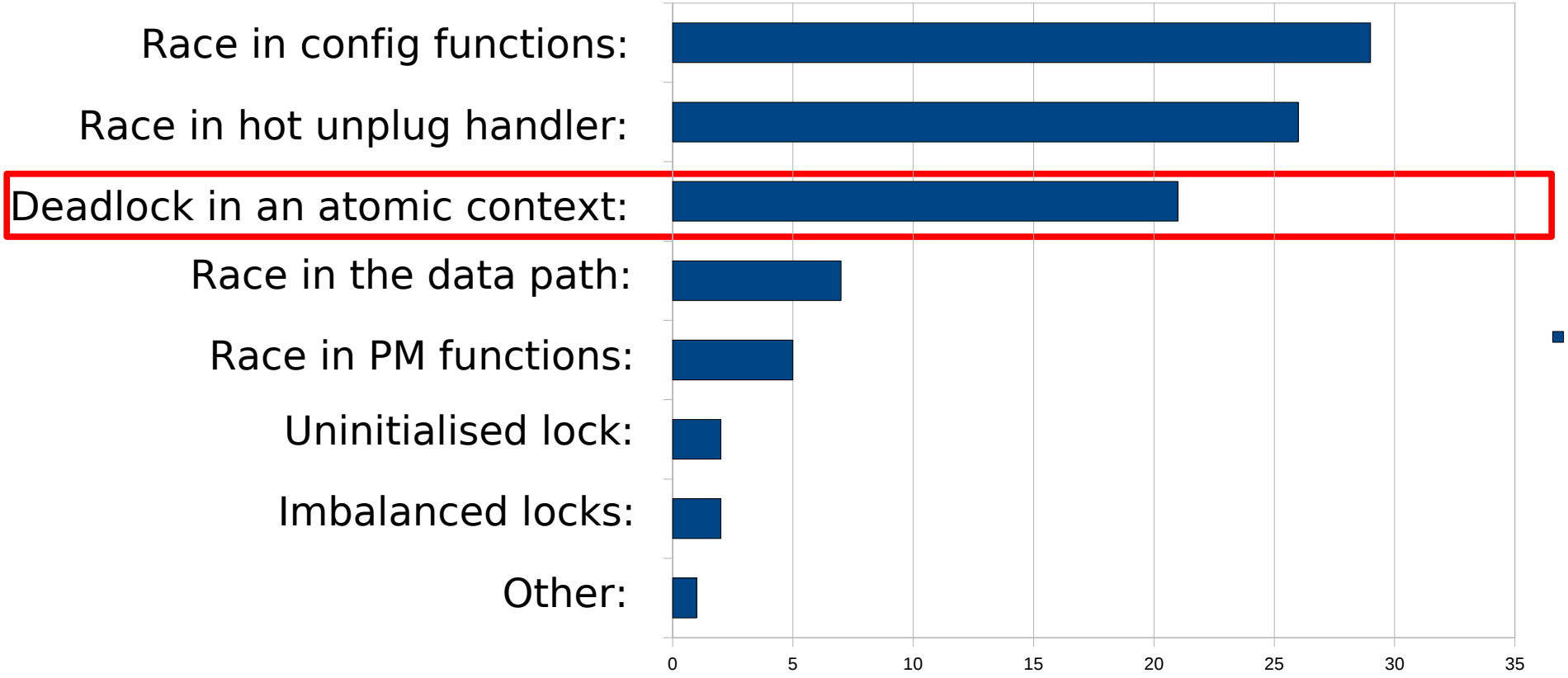

Concurrency errors

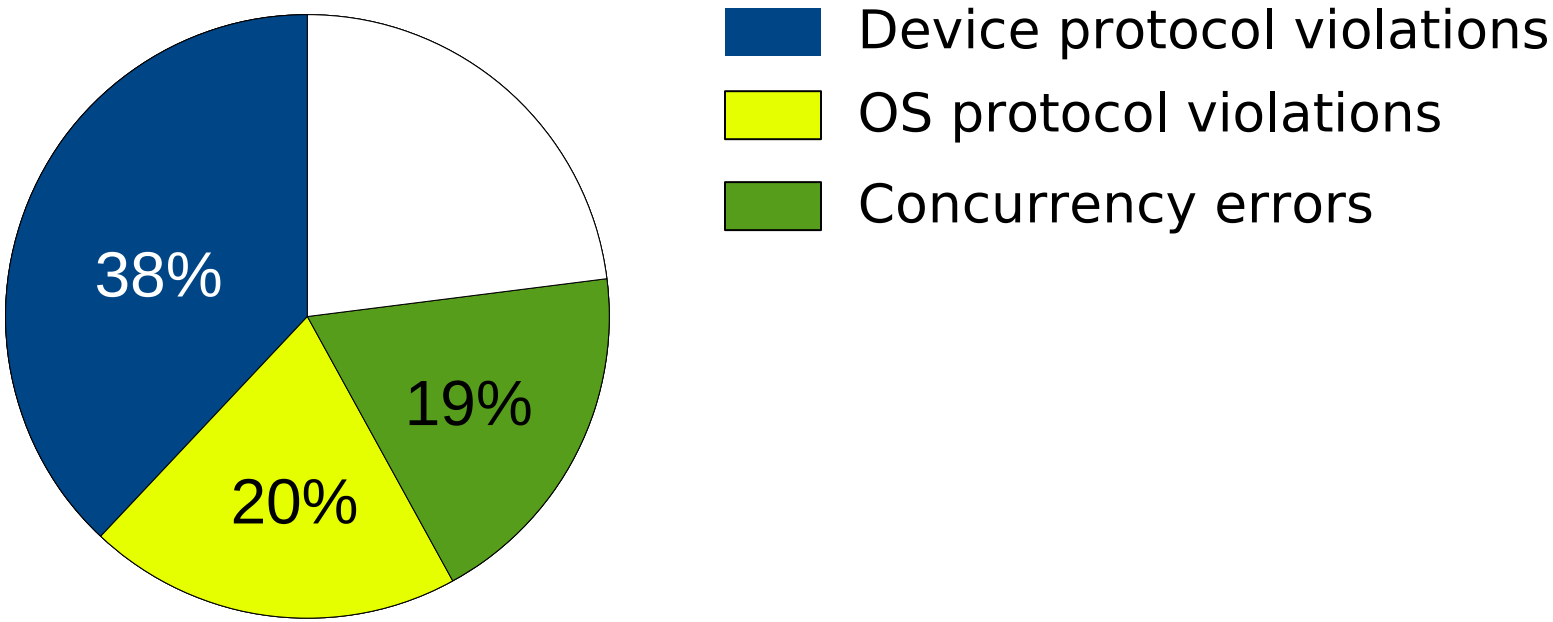

Generic errors

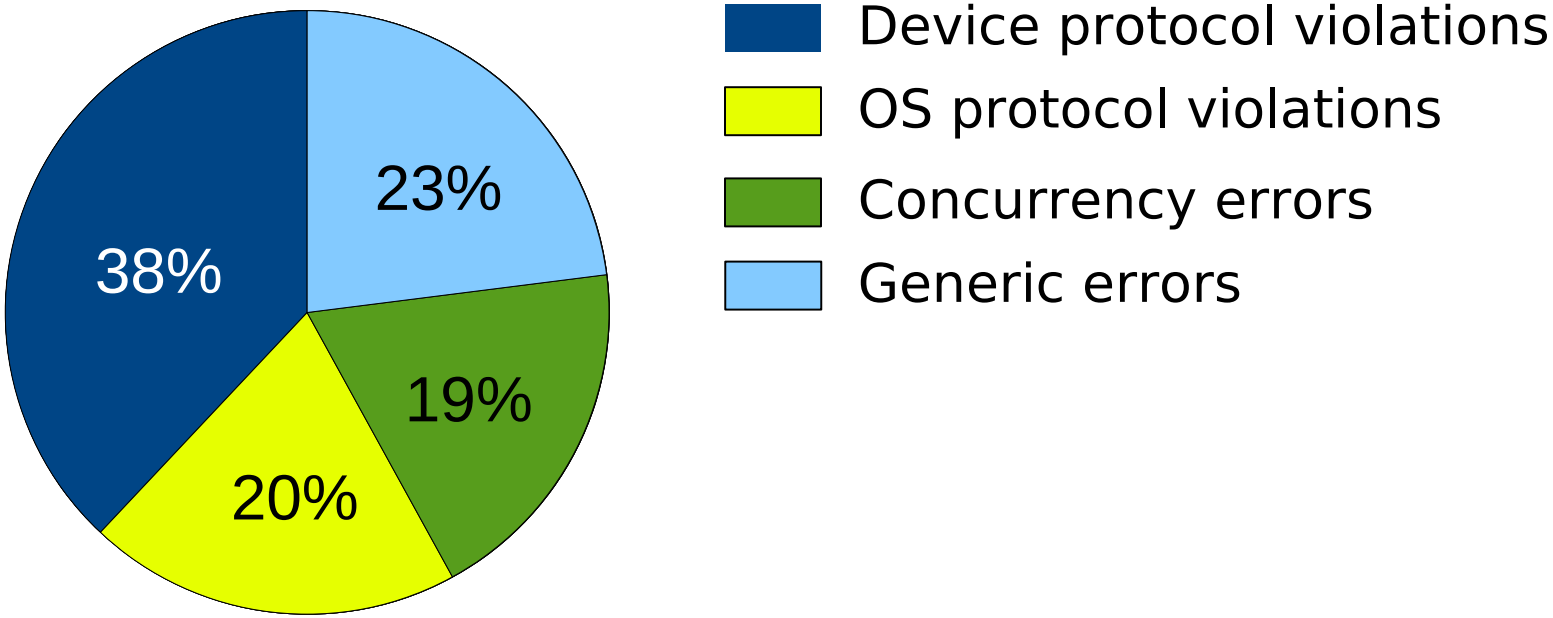

Dealing with concurrency bugs

Dealing with concurrency bugs

Threads

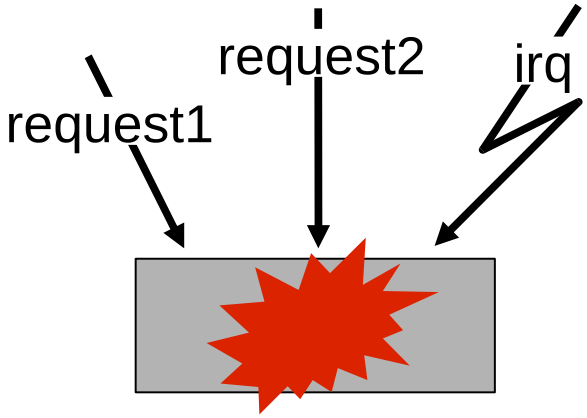

Dealing with concurrency bugs

Threads

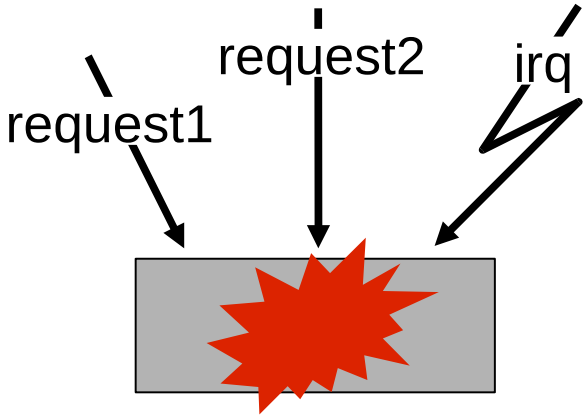

Events

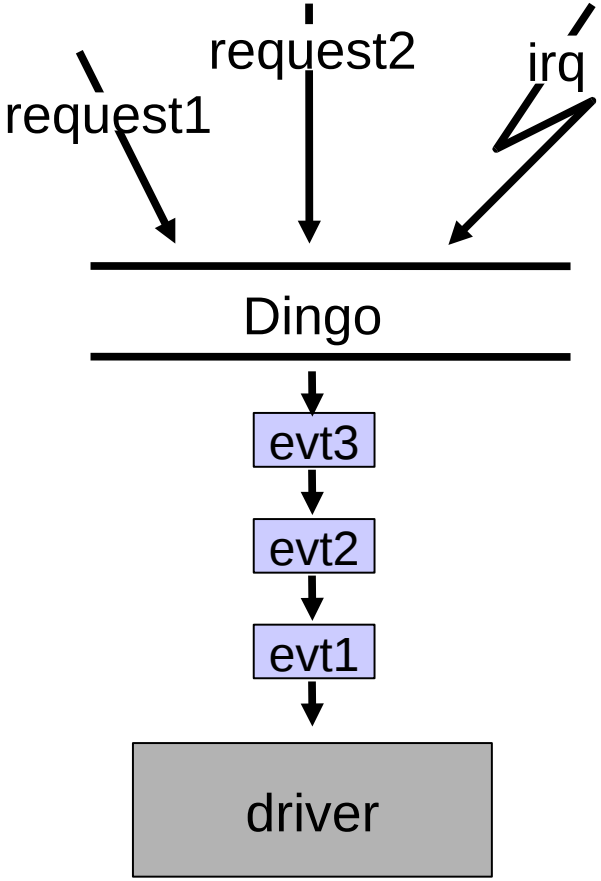

Writing non-blocking drivers

NICTA

Linux

```
int probe ()
{
  ...
  write_config_reg ();
  msleep(20);
  read_status_reg ();
  ...
}
```

Dingo

```
void probe ()
{
  ...
  write_config_reg ();
  timeout(20, probe2);
}

void probe2 ()
{
  read_status_reg ();
  ...
}
```

Writing non-blocking drivers

NICTA

Linux

```
int probe ()
{
  ...
  write_config_reg ();
  msleep(20);
  read_status_reg ();
  ...
}
```

Dingo

```
void probe ()
{
  simple_evt notif;
  ...
  write_config_reg ();
  CALL (timeout(20), notif);
  read_status_reg ();
  ...
}
```

Performance of the AX88772 USB-to-Ethernet adapter driver

Evaluation platform: 4 x 2GHz Itanium II (SMT, 2 threads per core)

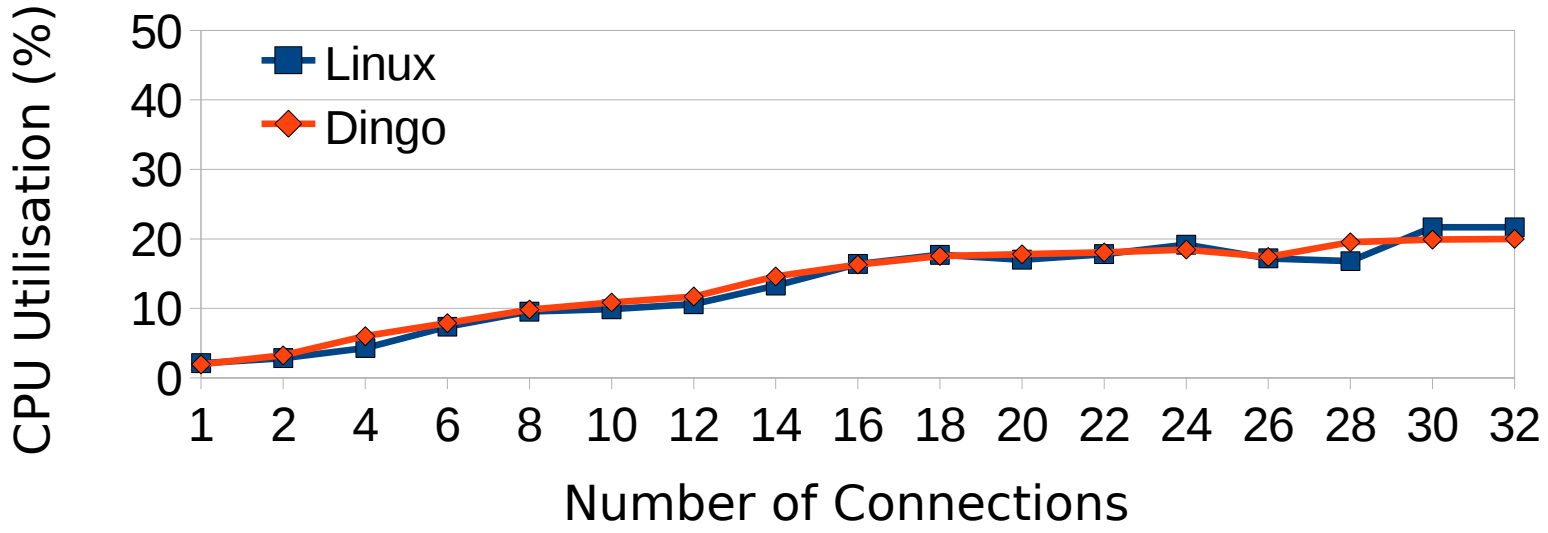

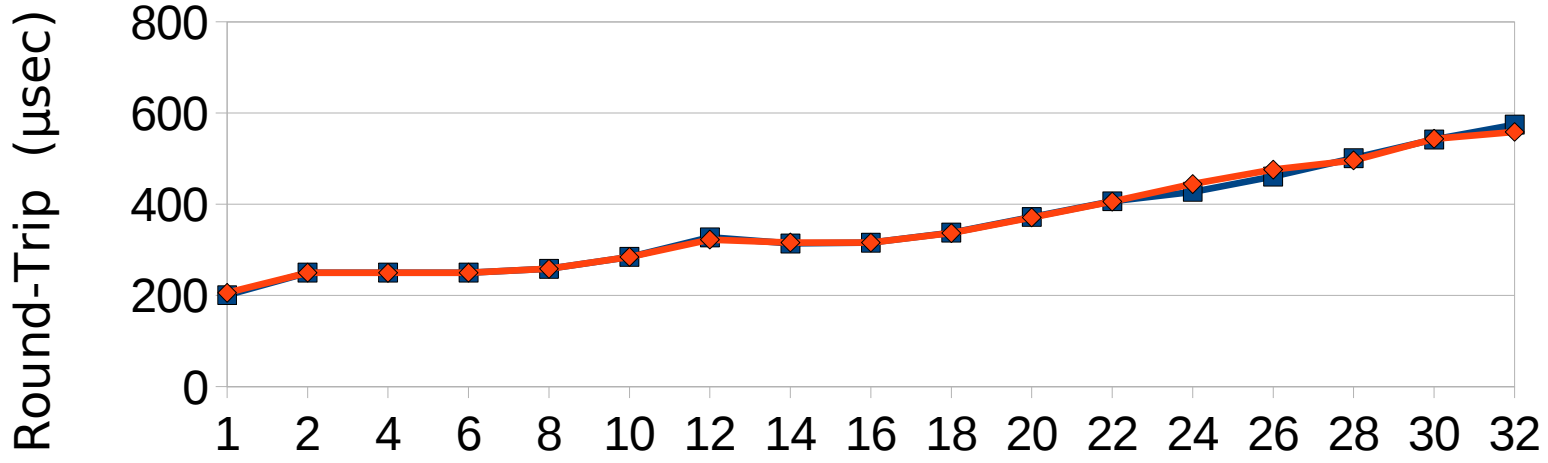

Impact of serialisation on performance

NICTA

Special case: drivers for very-high-performance devices

- Examples: 10Gb Ethernet, Infiniband
- For such drivers, serialisation affects performance on multiprocessors

Solution: Re-introduce multithreading at the data path

- Avoid concurrency bugs at the control path, while maintaining high performance at the data path

Performance of the Mellanox InfiniBand adapter driver

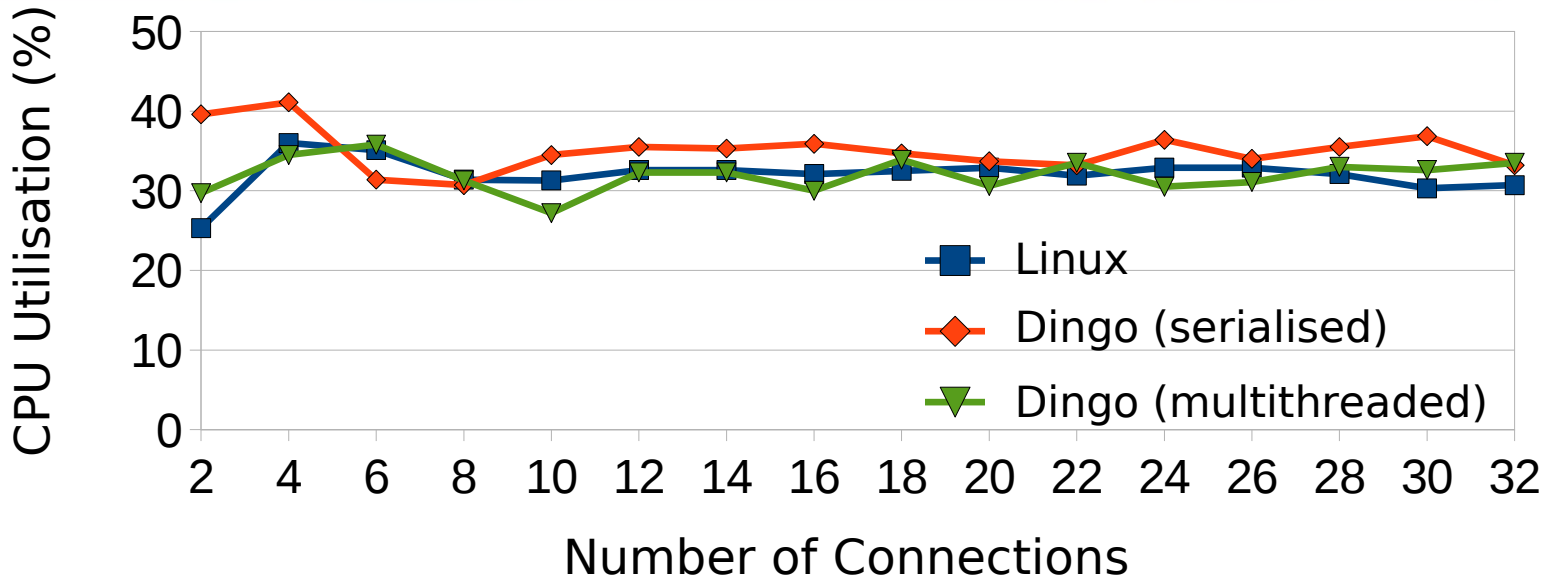

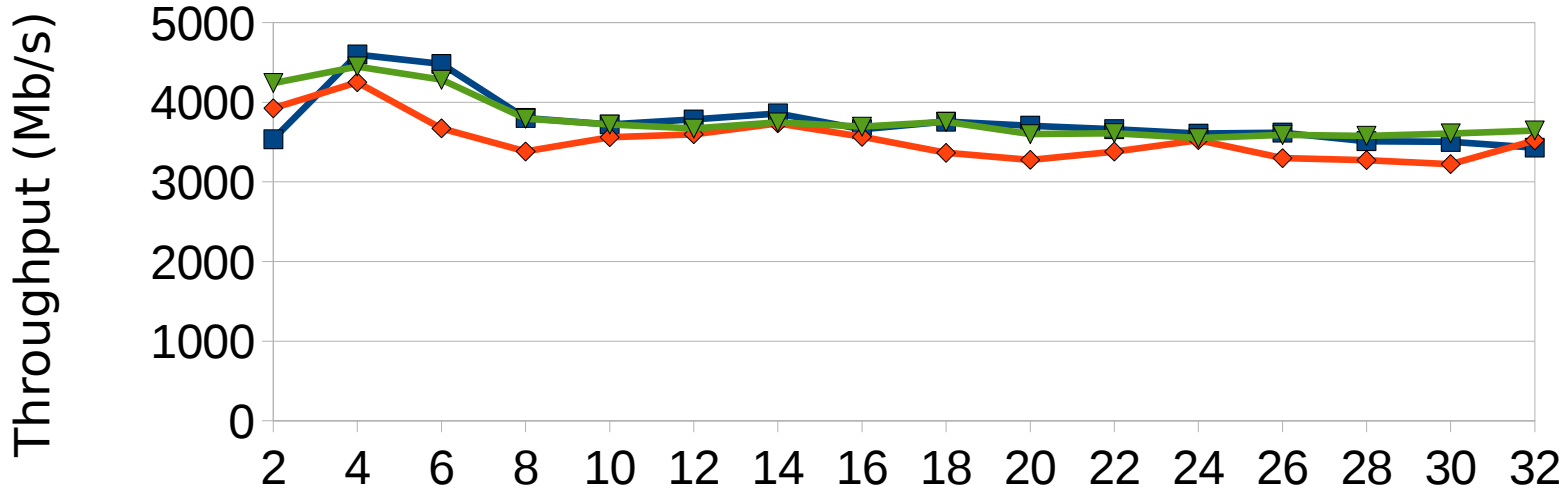

Dealing with OS protocol violations

Modeling driver protocols with state machines

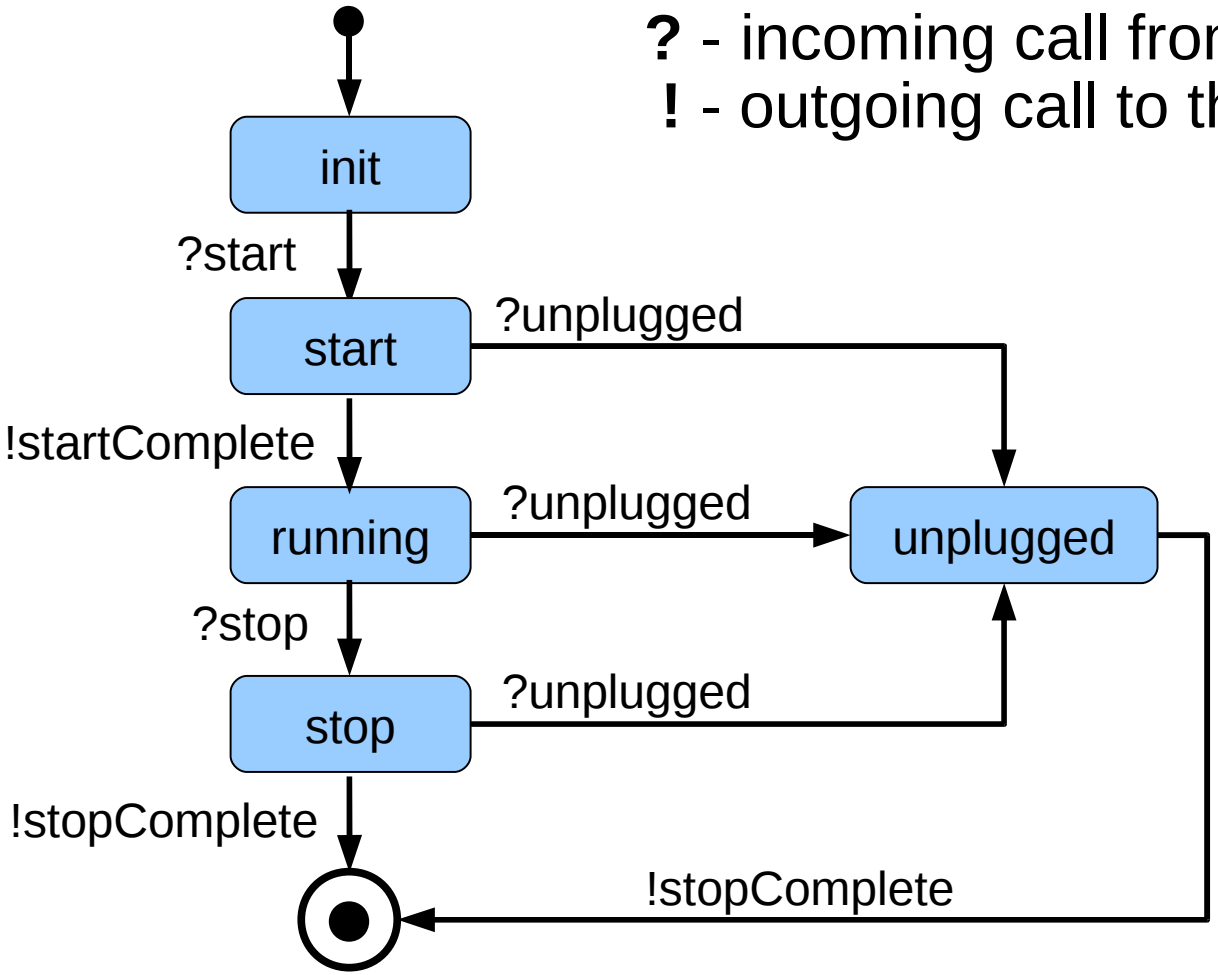

Ethernet controller protocol fragment

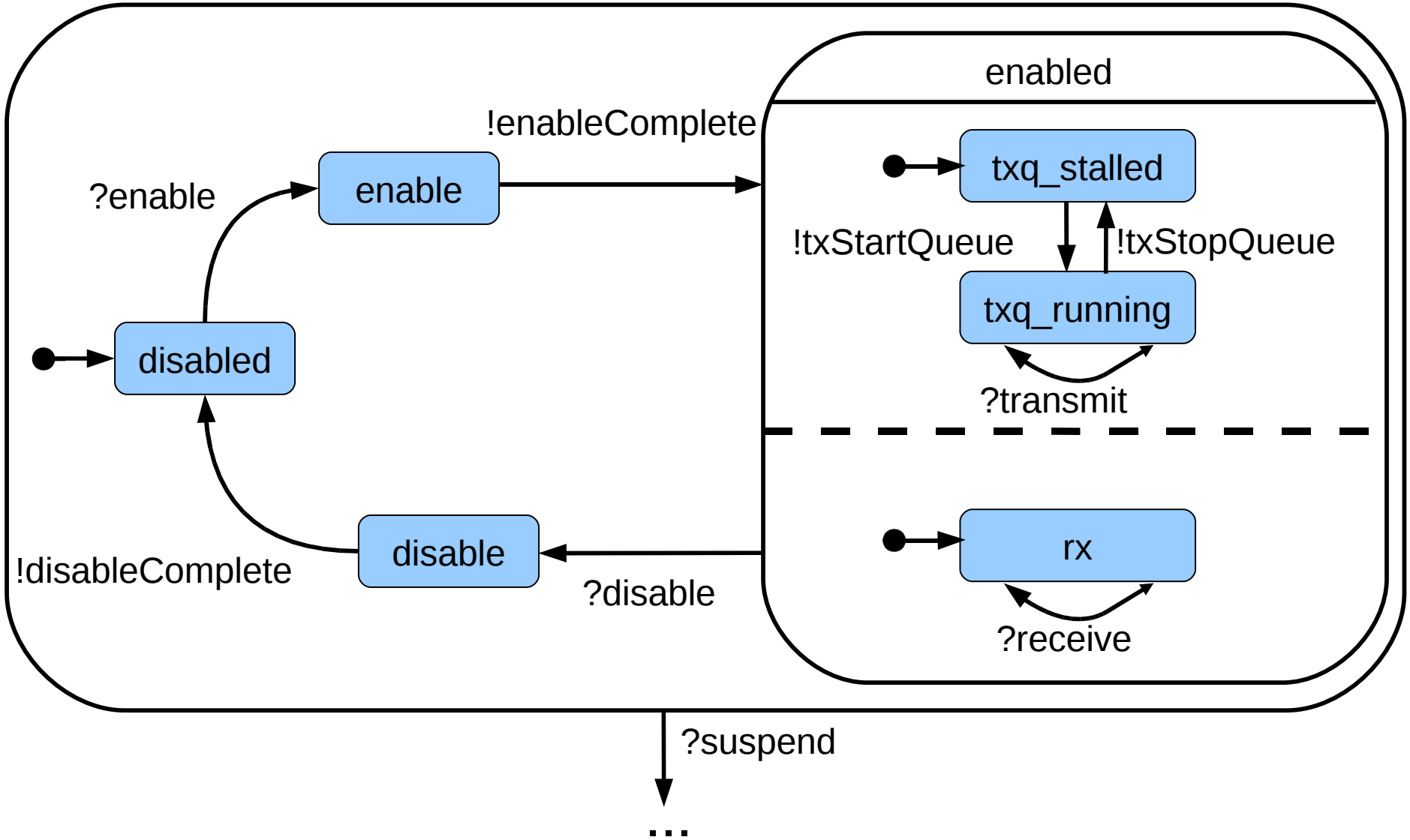

Other features of the language

Other features of the specification language:

- Timeouts
- Protocol variables
- Dynamic protocol spawning
- etc.

Runtime failure detection

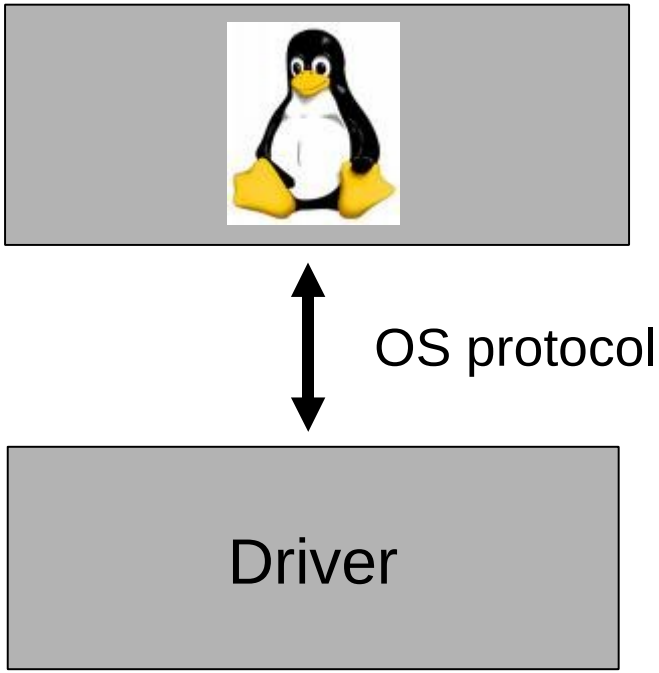

Runtime failure detection

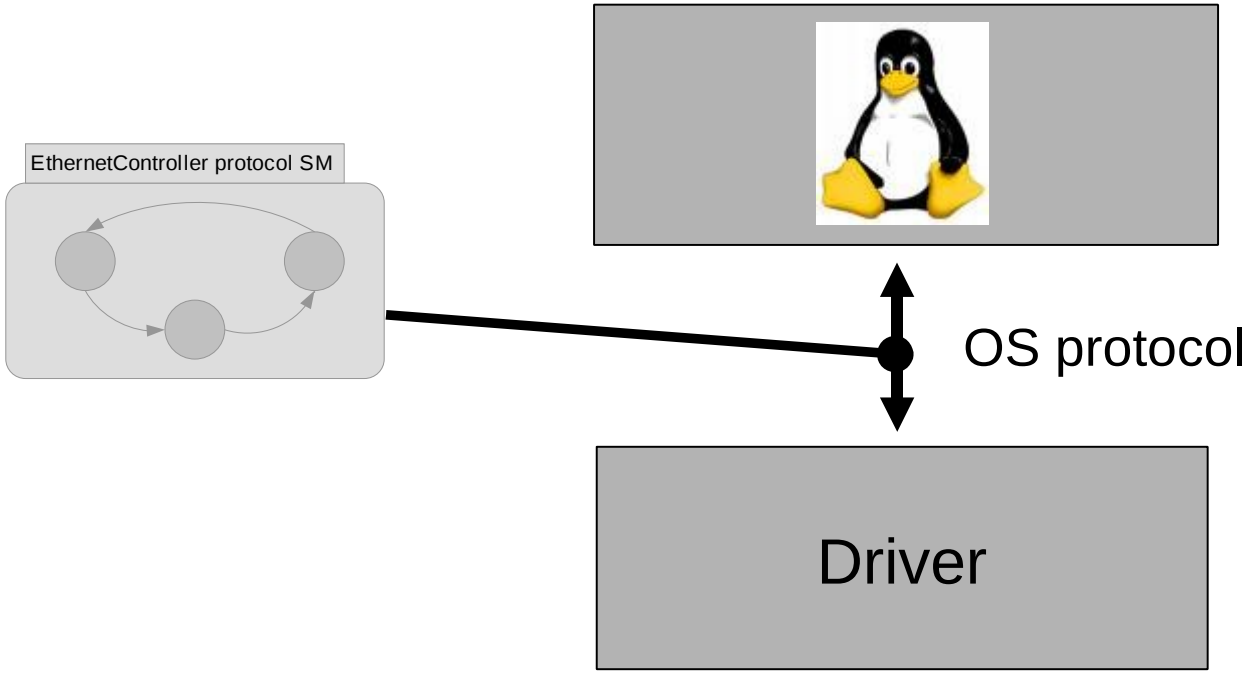

Current status

- Current status of Dingo
  - Building an open-source implementation of the Dingo architecture in Linux
- Project
  - Implement and evaluate device drivers for the Dingo architecture

Automatic Device Driver Synthesis with Termite

Leonid Ryzhyk, Peter Chubb, Ihor Kuz, Etienne Le Sueur, Gernot Heiser

UNSW, NICTA, Open Kernel Labs

Australian Government
Department of Broadband, Communications and the Digital Economy
Australian Research Council

NICTA Members
NICTA Partners

Device drivers today

Device datasheet

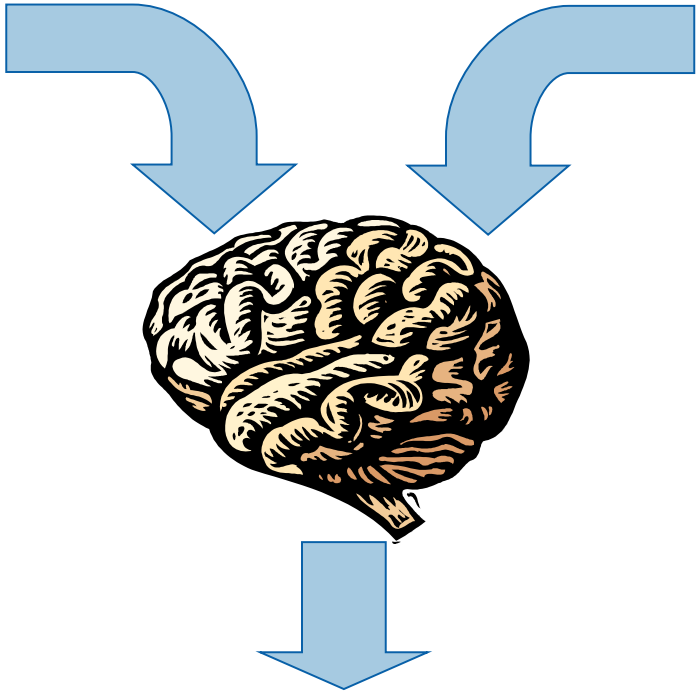

OS documentation/ headers

```
if (request_irq(i8042_ports[I8042_AUX_PORT_NO].irq, i8042_interrupt,
                SA_SHIRQ, "i8042", &i8042_check_aux_cookie))
        return -1;
free_irq(i8042_ports[I8042_AUX_PORT_NO].irq, &i8042_check_aux_cookie);
```

Driver implementation

Device drivers today

Device datasheet

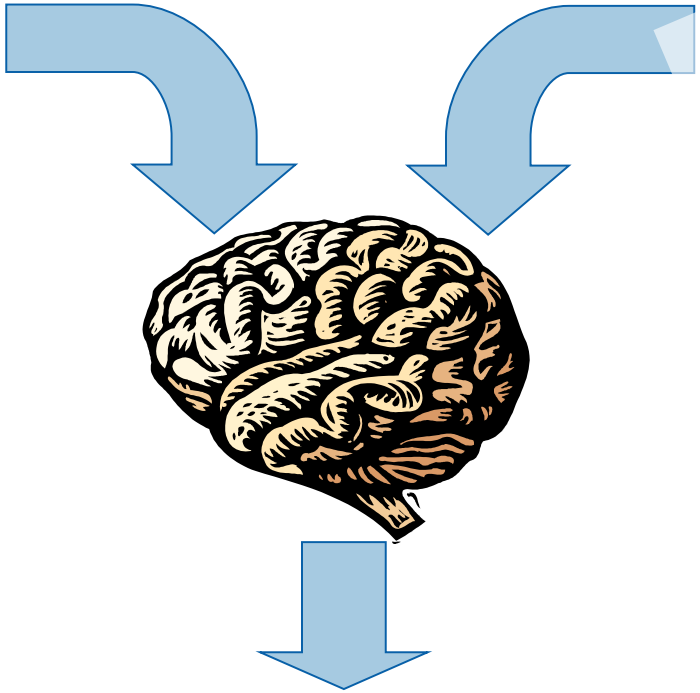

OS documentation/
headers

```
if (request_irq(i8042_ports[I8042_AUX_PORT_NO].irq, i8042_interrupt,
                SA_SHIRQ, "i8042", &i8042_check_aux_cookie))
        return -1;
free_irq(i8042_ports[I8042_AUX_PORT_NO].irq, &i8042_check_aux_cookie);
```

Driver implementation

Device drivers today

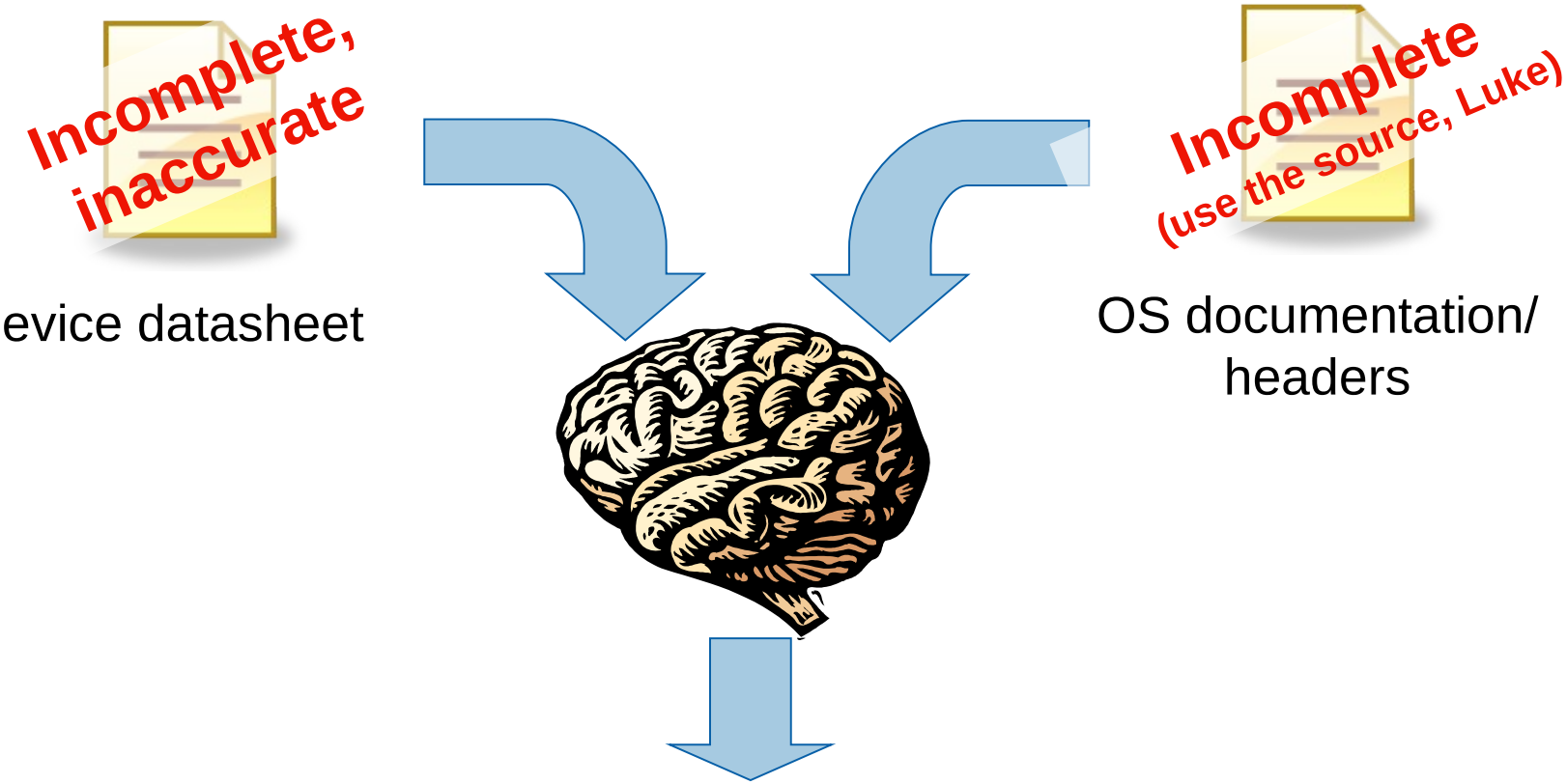

Drivers have more errors/LOC than any other OS component (by an OOM)

Driver implementation

Driver synthesis: a high-level view

Formal
device protocol
specification

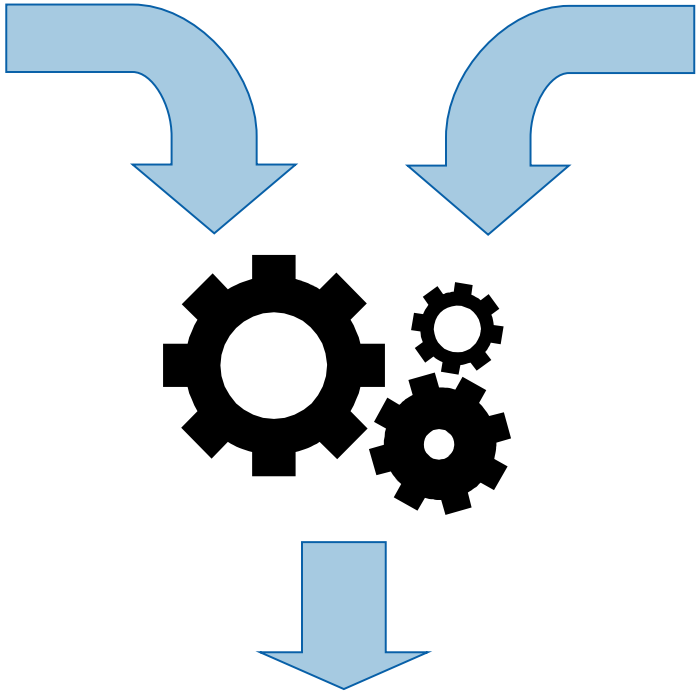

Formal
driver/OS protocol
specification

```
if (request_irq(i8042_ports[I8042_AUX_PORT_NO].irq, i8042_interrupt,
                SA_SHIRQ, "i8042", &i8042_check_aux_cookie))
        return -1;
free_irq(i8042_ports[I8042_AUX_PORT_NO].irq, &i8042_check_aux_cookie);
```

Driver implementation

Driver synthesis: a high-level view

Formal
device protocol
specification

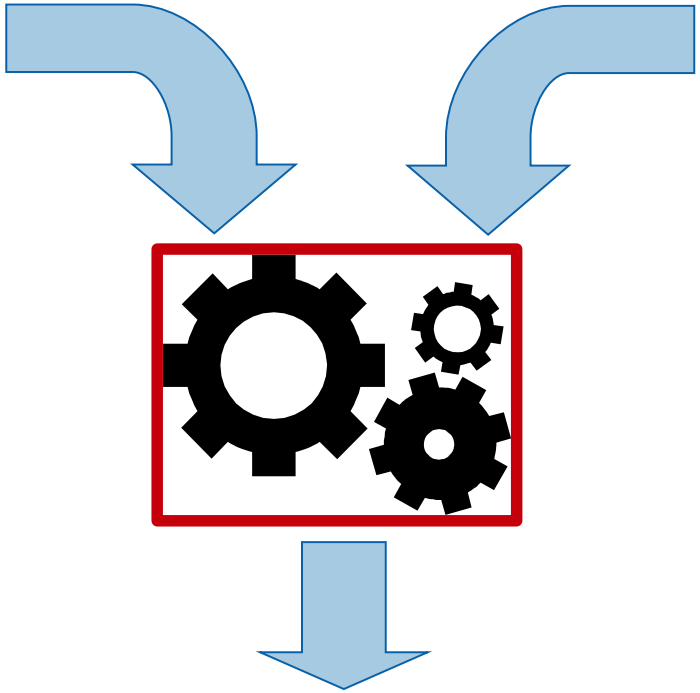

Formal
driver/OS protocol
specification

```
if (request_irq(i8042_ports[I8042_AUX_PORT_NO].irq, i8042_interrupt,
                SA_SHIRQ, "i8042", &i8042_check_aux_cookie))
        return -1;
free_irq(i8042_ports[I8042_AUX_PORT_NO].irq, &i8042_check_aux_cookie);
```

Driver implementation

Driver synthesis by example

dummy-net device

0=off 1=on	
ctrl	data

Driver synthesis by example

OS protocol specification:

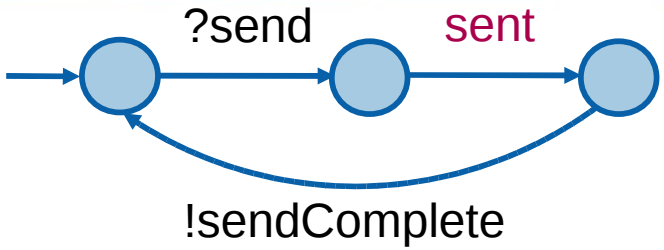

dummy-net device

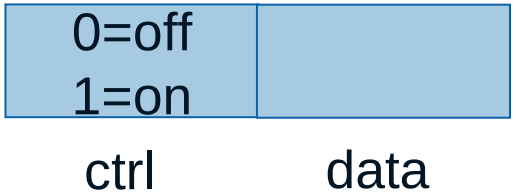

dummy-net driver

Device protocol specification:

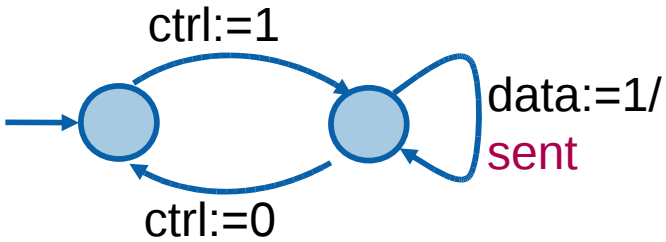

Driver synthesis by example

OS protocol specification:

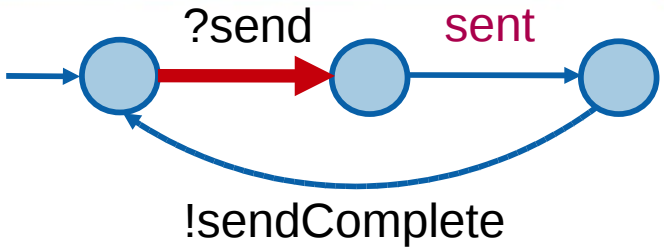

dummy-net device

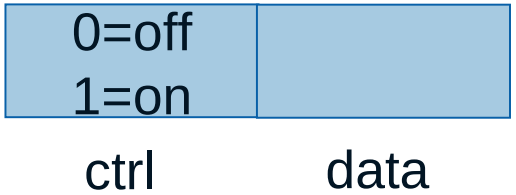

dummy-net driver

Device protocol specification:

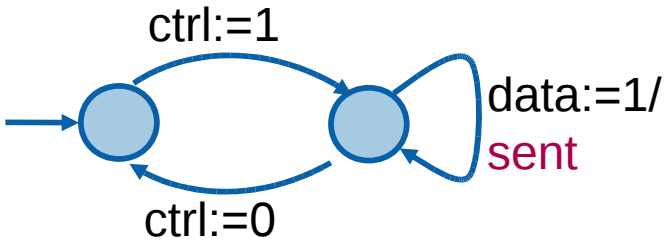

Driver synthesis by example

OS protocol specification:

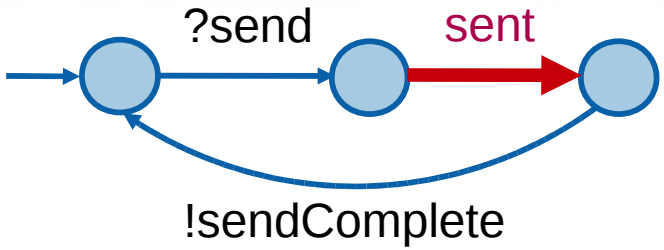

dummy-net device

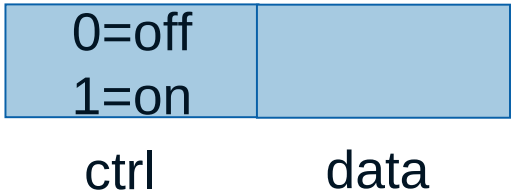

dummy-net driver

Device protocol specification:

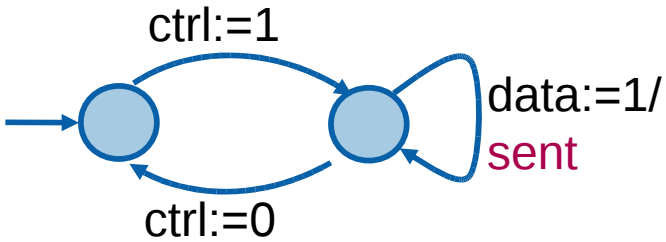

Driver synthesis by example

OS protocol specification:

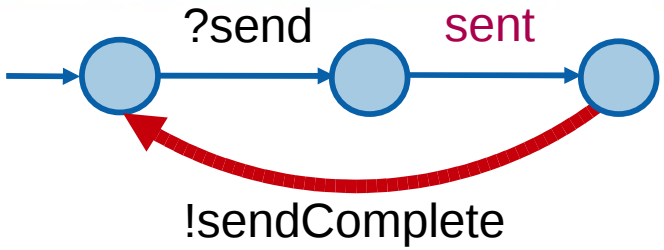

dummy-net device

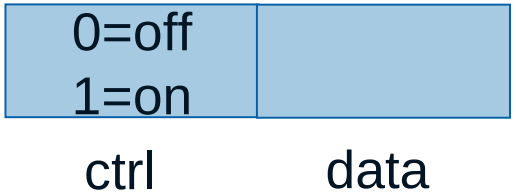

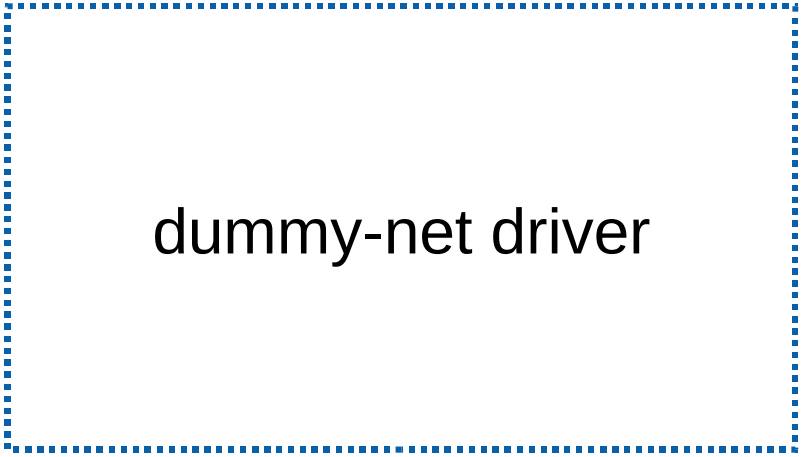

Device protocol specification:

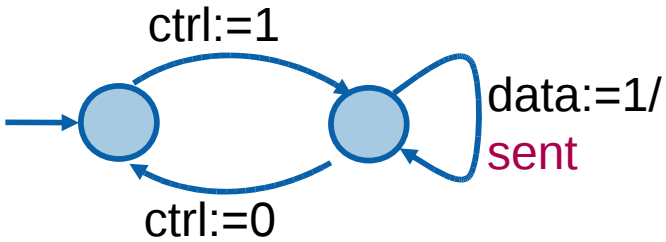

Driver synthesis by example

OS protocol specification:

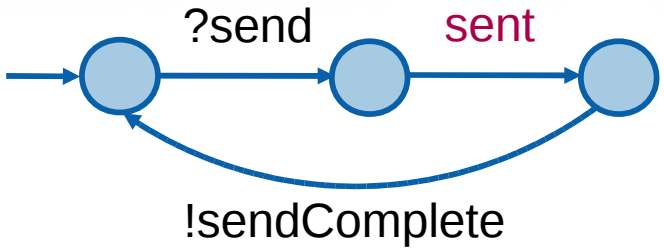

dummy-net device

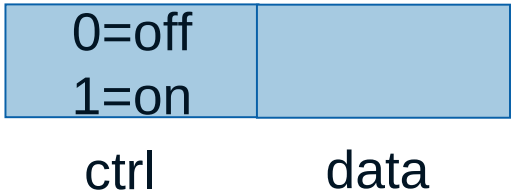

dummy-net driver

Device protocol specification:

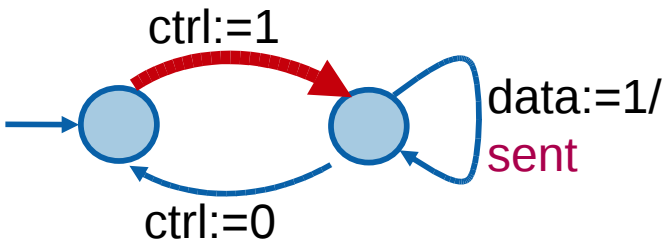

Driver synthesis by example

OS protocol specification:

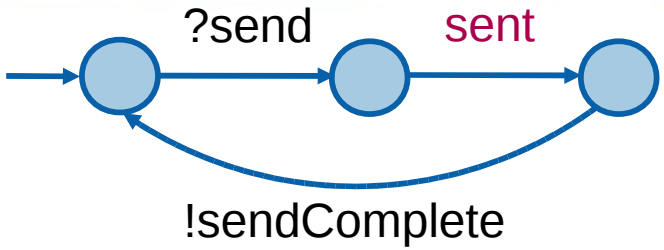

dummy-net device

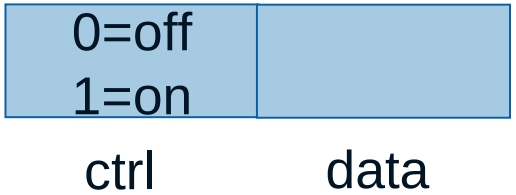

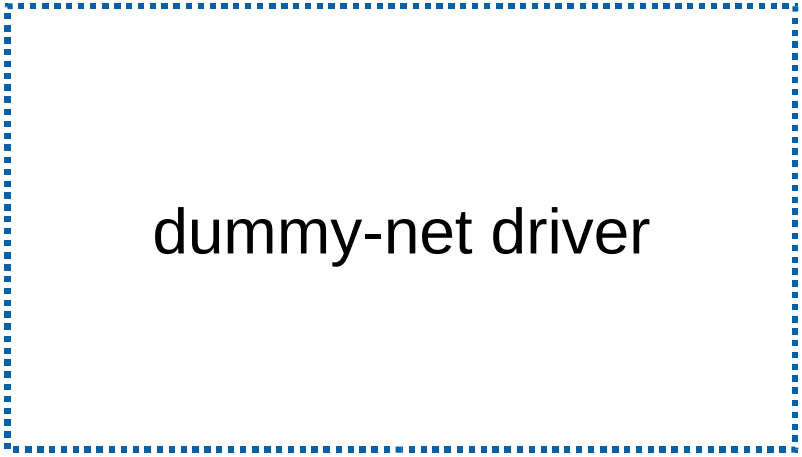

Device protocol specification:

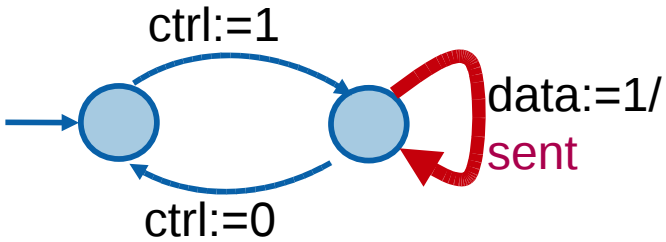

Driver synthesis by example

OS protocol specification:

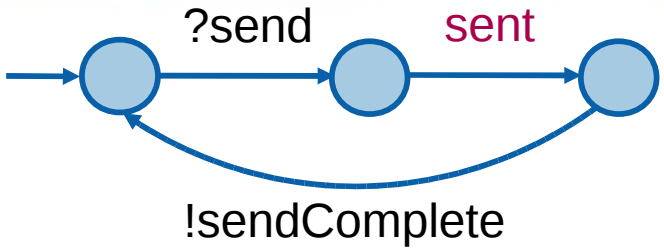

dummy-net device

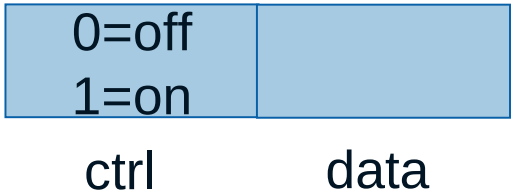

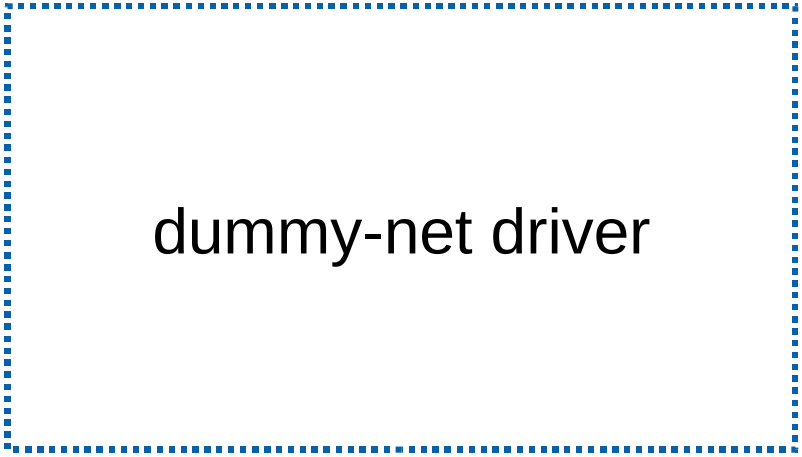

Device protocol specification:

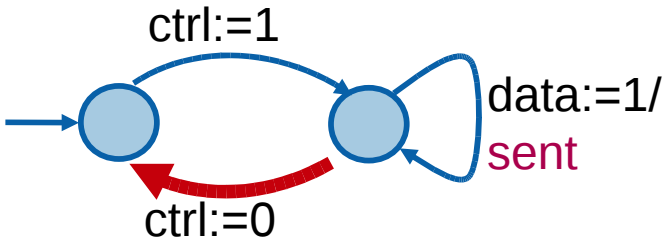

Driver synthesis by example

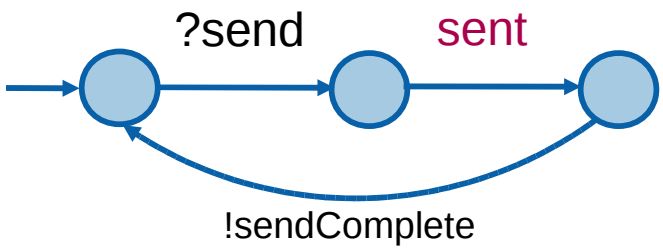

||

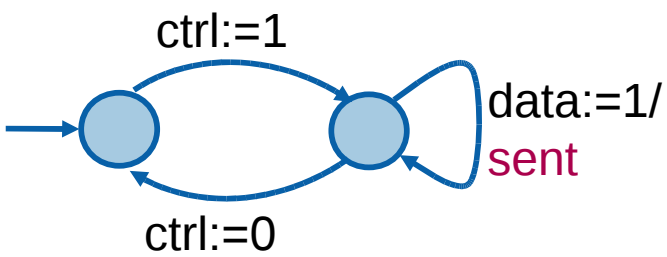

Driver synthesis by example

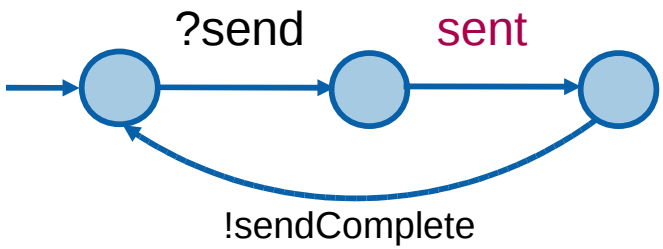

||

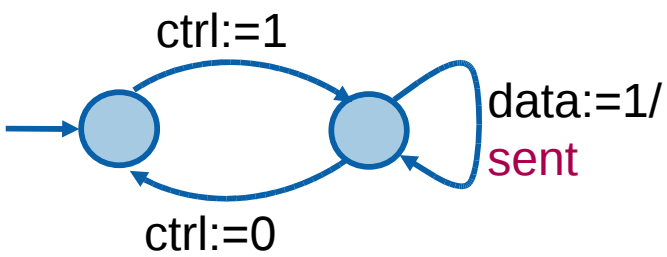

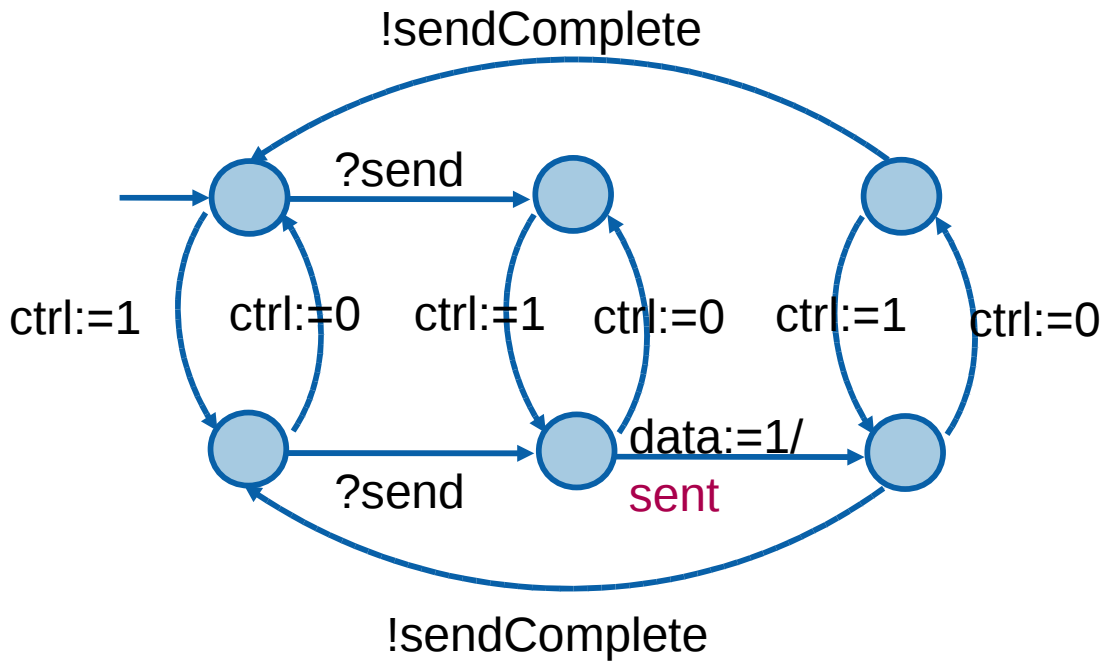

Driver synthesis by example

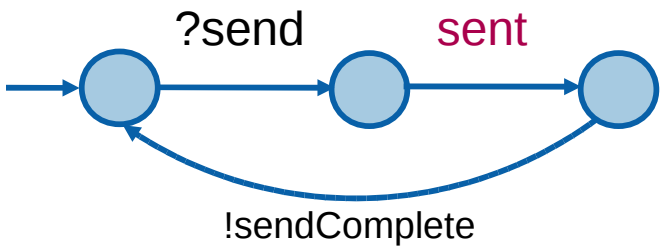

||

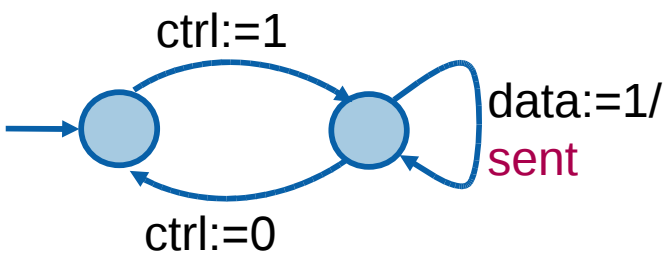

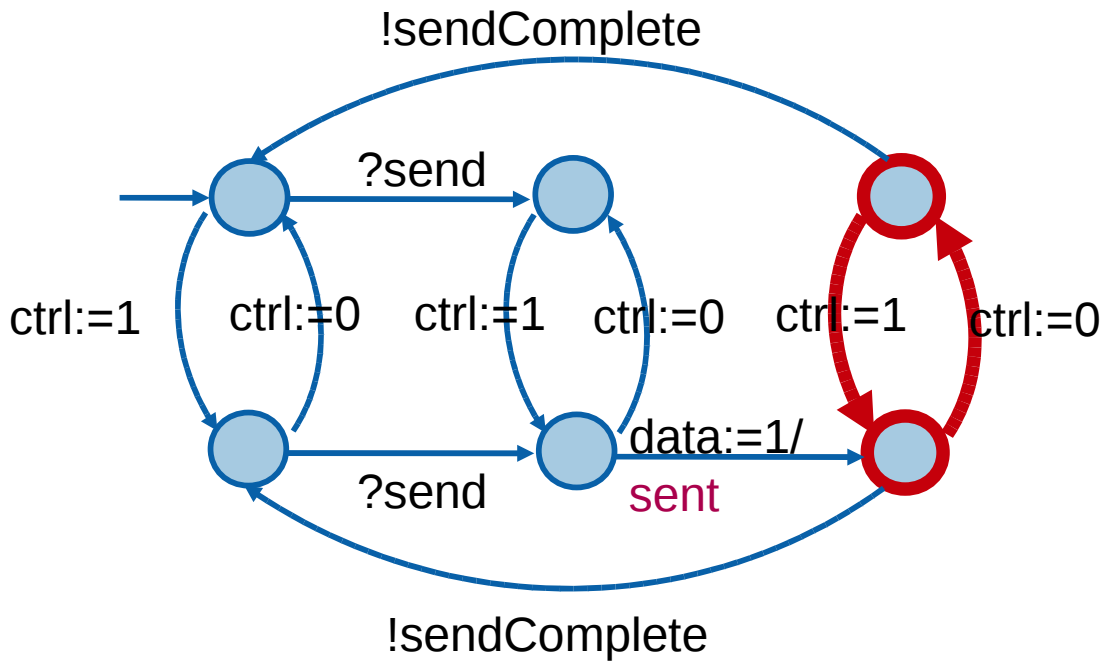

Driver synthesis by example

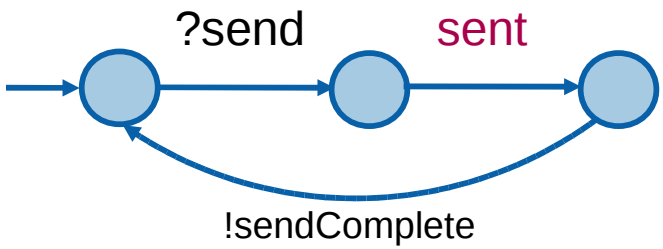

||

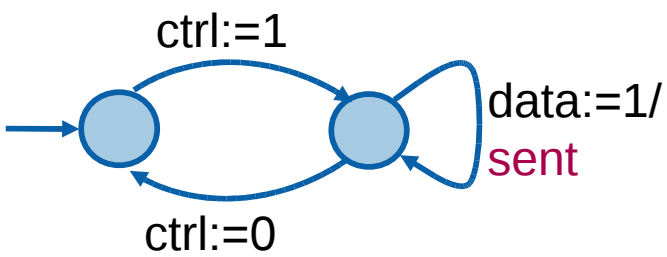

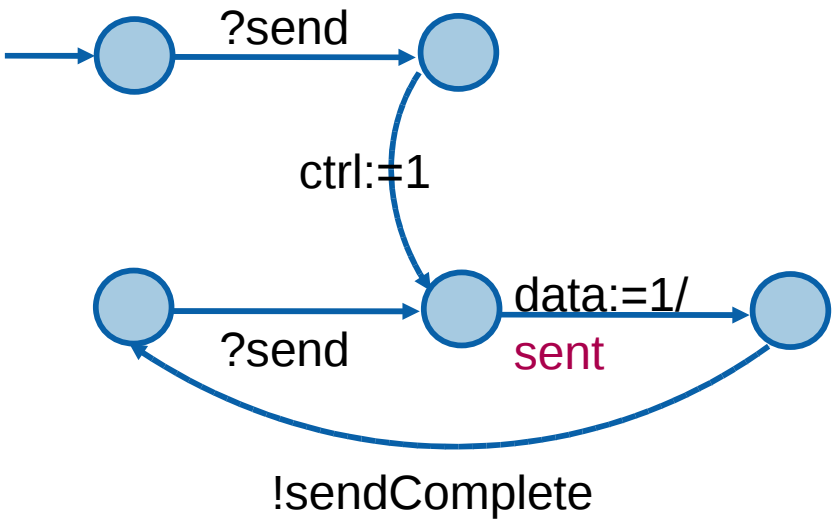

Driver synthesis by example

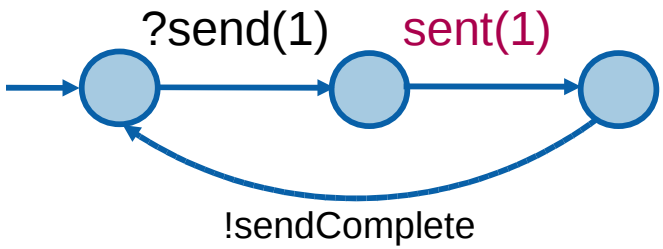

||

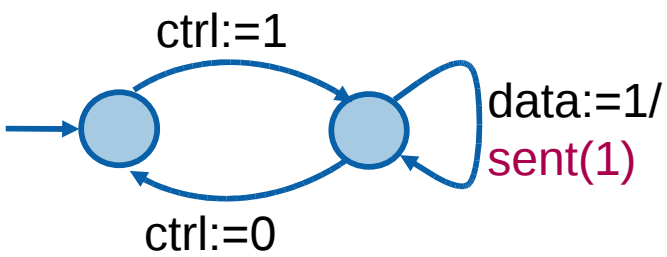

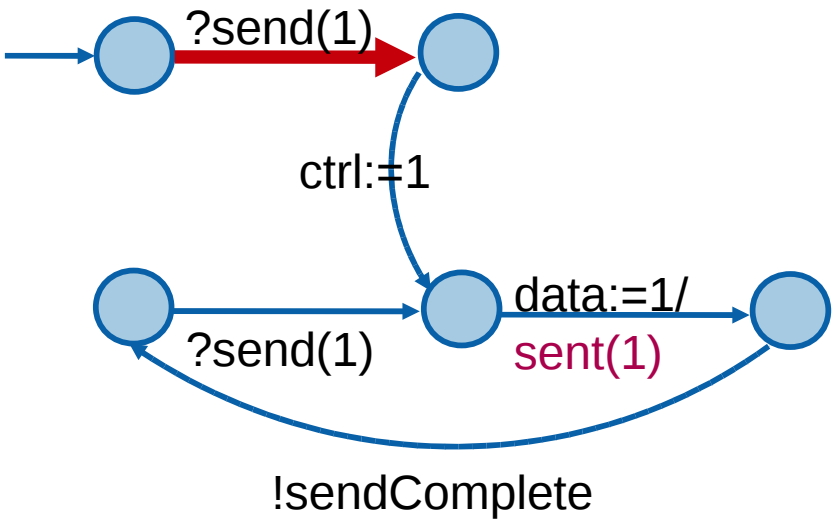

Driver synthesis by example

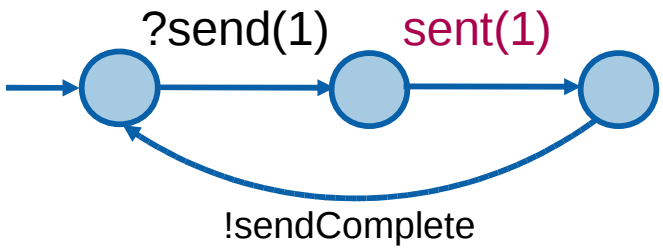

||

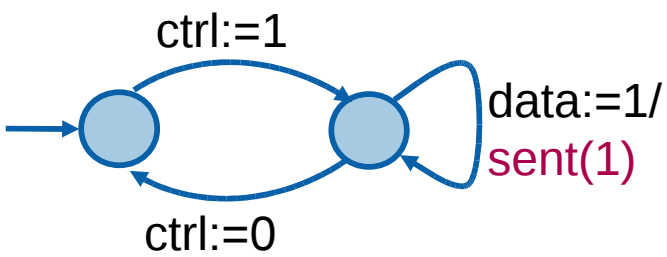

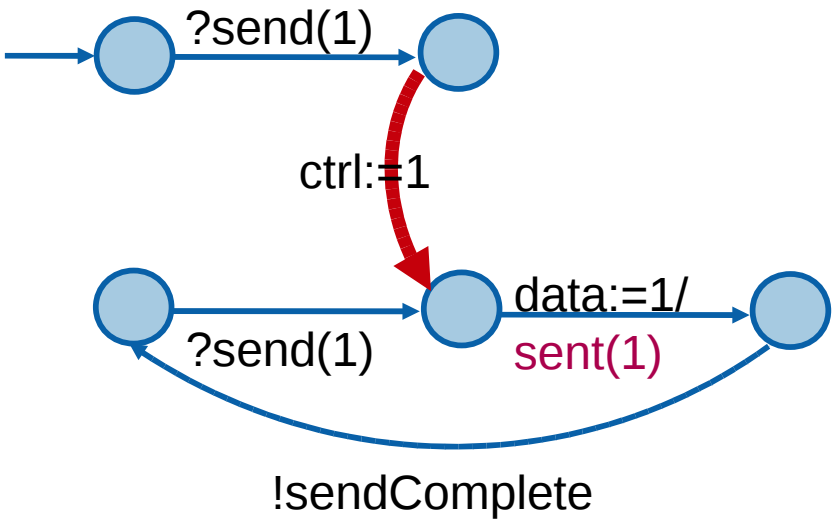

Driver synthesis by example

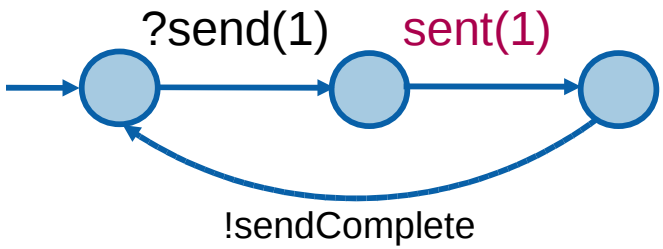

||

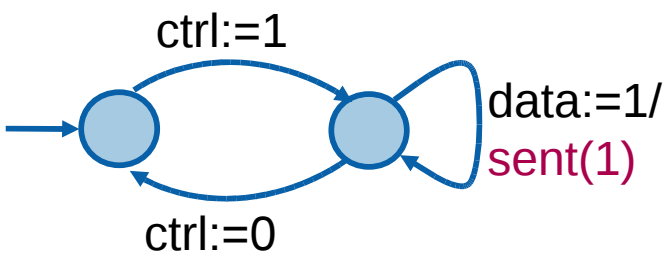

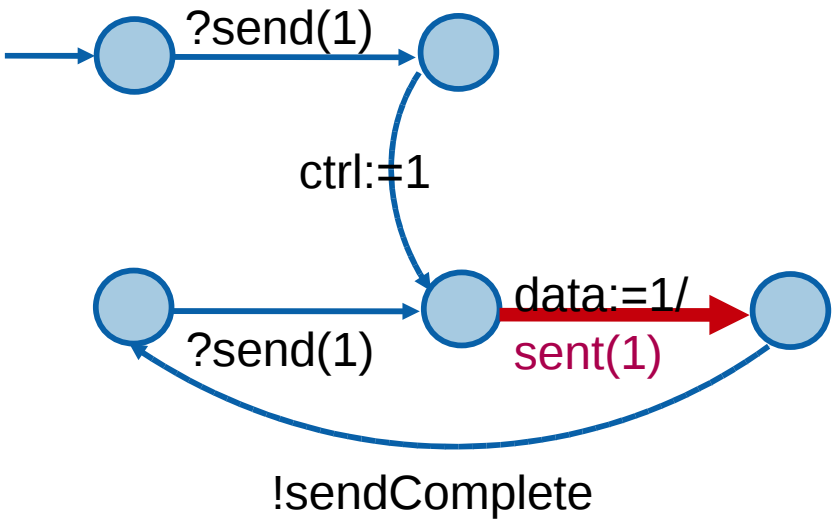

Driver synthesis by example

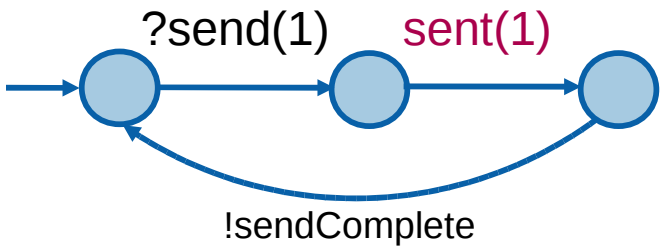

||

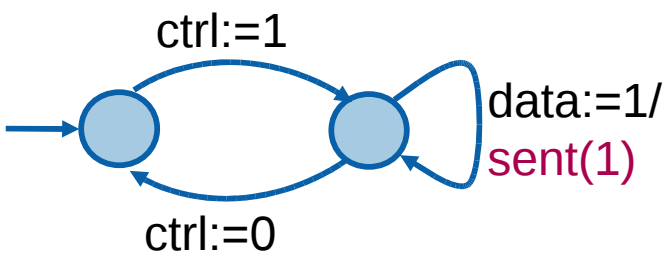

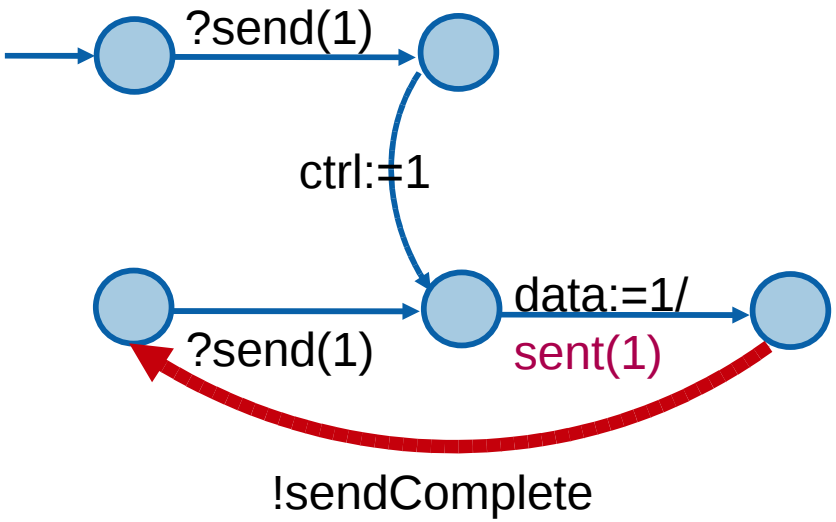

Implementation

ASIX 88772 100Mb/s USB-to-Eth controller driver

Questions?